Washer-Extractor

Cabinet Freestanding

Refer to Page 5 for Model Numbers

Parts

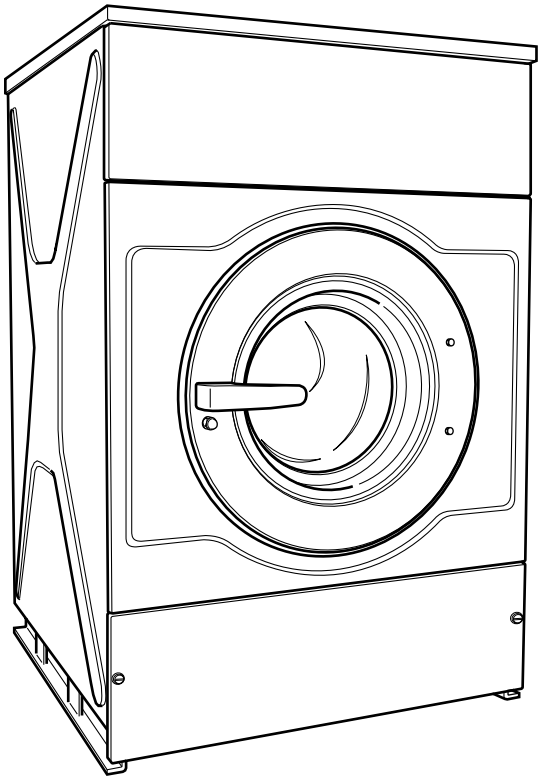

CFD21C_D0902

Alliance Laundry Systems

www.alliancelaundry.com

Part No. D0902R10
October 2013

Table of Contents

Title	Page
Parts Ordering Information	3
Nameplate Location	3
Model Identification	5
Cabinet Freestanding Washer-Extractor Product Overview	6
Frame	8
Shock Absorber	10
Shell and Basket (Drawing 1 of 4)	12
Shell and Basket (Drawing 2 of 4)	14
Shell and Basket (Drawing 3 of 4)	16
Shell and Basket (Drawing 4 of 4)	18
Bearing Housing - Models Through 1/30/11	20
Bearing Housing - Models Starting 1/31/11	22
Basket, Pulley and Belt (Drawing 1 of 2)	24
Basket, Pulley and Belt (Drawing 2 of 2)	26
Motor and Belt	28
Drain Plumbing - Single Outlet Drain Piece with Water Level Detection on Drain Valve-Models Through 8/11/10	30
Drain Plumbing - Single Outlet Drain Piece with Water Level Detection on Drain Hose-Models Starting 8/12/10	32
Drain Plumbing - Dual Outlet Drain Piece with Water Level Detection on Drain Hose	34
Drain Plumbing - Models with Pump Drain Through 1/26/05	36
Drain Plumbing - Models with Pump Drain Starting 1/27/05	38
Door Lock	40
Door	42
Control Panel - Cygnus Professional	44
Control Panel - Cygnus Premium OPL	46
Control Panel - Cygnus Premium OPL with Frontal Supply Dispenser	48
Control Panel - Cygnus Premium Coin	50
Control Panel - Cygnus Premium Coin with Frontal Supply Dispenser	52
Control Panel - Cygnus Standard/Commercial OPL	54
Control Panel - Cygnus Standard/Commercial OPL with Frontal Supply Dispenser	56
Control Panel - Cygnus Standard/Commercial Coin	58
Control Panel - Cygnus Standard/Commercial Coin with Frontal Supply Dispenser	60
Control Panel - Micro-20 OPL	62
Control Panel - Micro-20 OPL with Frontal Supply Dispenser	64
Control Panel - Sigma OPL	66
Control Panel - Micro-20 and Sigma Coin	68
Control Panel - PS40F	70
Coin Drop - Mechanical Coin Meter	72
Coin Drop - Electronic Coin Meter	74
Right Side, Front, Lower Rear and Top Panels - Models with Pump Drain	76
Right Side, Front, Lower Rear and Top Panels - Models without Pump Drain	78
Left Side, Lower Front and Upper Back Panels	80

© Copyright 2013, Alliance Laundry Systems LLC

All rights reserved. No part of the contents of this book may be reproduced or transmitted in any form or by any means without the expressed written consent of the publisher.

Inverter Drive - Models Through 2/22/09 (Drawing 1 of 2) 82
Inverter Drive - Models Through 2/22/09 (Drawing 2 of 2) 84
Inverter Drive - Models Starting 2/23/09 (Drawing 1 of 2) 86
Inverter Drive - Models Starting 2/23/09 (Drawing 2 of 2) 88
Upper Back Panel with Circular Ventilation - Models Through 12/31/05 90
Upper Back Panel with Rectangular Ventilation - Models Through 12/31/05 92
Upper Back Panel - Models Starting 1/1/06 94
Main Switch and Noise Filter 96
Soap Injection Printboard, Network Connection Printboard and Noise Filter - Sigma, PS40F and Micro-20 98
Central Operating Panel, Network Connection and Soap Injection Printboards - Cygnus Models 100
Relay, Network Connection and Main Printboards - Cygnus Models 102
Electrical Component Mounting Plate - Models Through 2/22/09 104
Electrical Component Mounting Plate - Models Starting 2/23/09 106
Balance Switch 108
Supply Dispenser - Models with Frontal Supply Dispenser 110
Supply Dispenser with Round Ventilation Opening 112
Supply Dispenser with Rectangular Ventilation Opening 114
Electric and Steam Heating Options 116
Soap Pumps 118
Parts Index 121

© Copyright, Alliance Laundry Systems LLC – DO NOT COPY or TRANSMIT

Parts Ordering Information

If literature or replacement parts are required, contact the source from whom the machine was purchased or contact Alliance Laundry Systems at (920) 748-3950 for the name and address of the nearest authorized parts distributor.

For technical assistance, call either of the numbers listed below:

(920) 748-3121 Ripon, Wisconsin

+32 56 41 20 54 Wevelgem, Belgium

Nameplate Location

When calling or writing about your product, be sure to mention model and serial numbers. Model and serial numbers are located on nameplate(s) as shown.

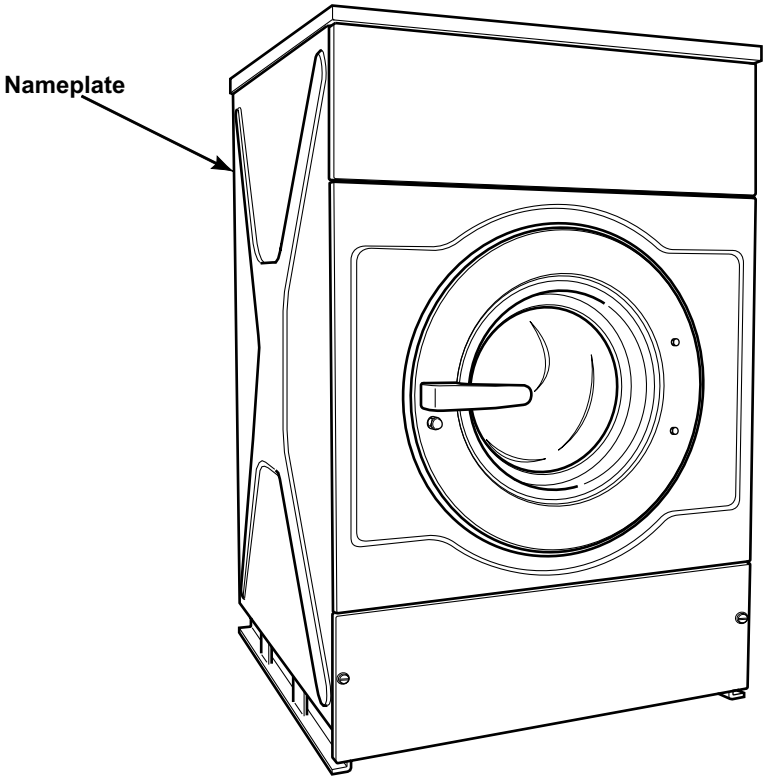

CFD21CA_D0902

© Copyright, Alliance Laundry Systems LLC – DO NOT COPY or TRANSMIT

Notes

© Copyright, Alliance Laundry Systems LLC – DO NOT COPY or TRANSMIT

Model Identification

Information in this manual is applicable to these washer-extractor models:

HC60_CYGNUS-COMM_COIN
HC60_CYGNUS-COMM_OPL
HC60_CYGNUS-PREM_COIN
HC60_CYGNUS-PREM_OPL
HC60_CYGNUS-PRO
HC60_CYGNUS-STANDARD_COIN
HC60_CYGNUS-STANDARD_OPL
HC60_MICRO-20_COIN
HC60_MICRO-20_OPL
HC60_PS40F
HC60_SIGMA_COIN
HC60_SIGMA_OPL
HC65_CYGNUS-COMM_COIN
HC65_CYGNUS-COMM_OPL
HC65_CYGNUS-PREM_COIN
HC65_CYGNUS-PREM_OPL
HC65_CYGNUS-PRO
HC65_CYGNUS-STANDARD_COIN
HC65_CYGNUS-STANDARD_OPL
HC65_MICRO-20_COIN
HC65_MICRO-20_OPL
HC65_PS40F
HC65_SIGMA_COIN
HC65_SIGMA_OPL
HC75_CYGNUS-COMM_COIN
HC75_CYGNUS-COMM_OPL
HC75_CYGNUS-PREM_COIN
HC75_CYGNUS-PREM_OPL
HC75_CYGNUS-PRO
HC75_CYGNUS-STANDARD_COIN
HC75_CYGNUS-STANDARD_OPL
HC75_MICRO-20_COIN
HC75_MICRO-20_OPL
HC75_PS40F
HC75_SIGMA_COIN
HC75_SIGMA_OPL
HC100_CYGNUS-COMM_COIN
HC100_CYGNUS-COMM_OPL
HC100_CYGNUS-PREM_COIN
HC100_CYGNUS-PREM_OPL
HC100_CYGNUS-PRO
HC100_CYGNUS-STANDARD_COIN
HC100_CYGNUS-STANDARD_OPL
HC100_MICRO-20_COIN
HC100_MICRO-20_OPL
HC100_PS40F
HC100_SIGMA_COIN
HC100_SIGMA_OPL

CHC012ANH
CHC012MNH
CHC018ANH
CHC018MNH
CHC025ANH
CHC025MNH
IHC012ANH
IHC012MCH
IHC012MDH
IHC012MEH
IHC012MLH
IHC012MNH
IHC012MXH
IHC012MYH
IHC012SCH
IHC012SDH
IHC012SEH
IHC012SLH
IHC012SRH
IHC012SXH
IHC012SYH
IHC018ANH
IHC018MCH
IHC018MDH
IHC018MEH
IHC018MLH
IHC018MNH
IHC018MXH
IHC018MYH
IHC018SCH
IHC018SDH
IHC018SEH
IHC018SLH
IHC018SRH
IHC018SXH
IHC018SYH
IHC025ANH
IHC025MCH
IHC025MDH

IHC025MEH
IHC025MLH
IHC025MNH
IHC025MXH
IHC025MYH
IHC025SCH
IHC025SDH
IHC025SEH
IHC025SLH
IHC025SRH
IHC025SXH
IHC025SYH
IHC060ANH
IHC060MCH
IHC060MDH
IHC060MEH
IHC060MLH
IHC060MNH
IHC060MRH
IHC060MXH
IHC060MYH
IHC060SCH
IHC060SDH
IHC060SEH
IHC060SLH
IHC060SRH
IHC060SXH
IHC060SYH
IHC060ZNH
IHC065ANH
IHC065MCH
IHC065MDH
IHC065MEH
IHC065MLH
IHC065MNH
IHC065MRH
IHC065MXH
IHC065MYH
IHC065SCH
IHC065SDH
IHC065SEH
IHC065SLH
IHC065SRH
IHC065SXH
IHC065SYH
IHC065ZNH

IHC075ANH
IHC075MCH
IHC075MDH
IHC075MEH
IHC075MLH
IHC075MNH
IHC075MRH
IHC075MXH
IHC075MYH
IHC075SCH
IHC075SDH
IHC075SEH
IHC075SLH
IHC075SRH
IHC075SXH
IHC075SYH
IHC075ZNH
IHC100ANH
IHC100MCH
IHC100MDH
IHC100MEH
IHC100MLH
IHC100MNH
IHC100MRH
IHC100MXH
IHC100MYH
IHC100SCH
IHC100SDH
IHC100SEH
IHC100SLH
IHC100SRH
IHC100SXH
IHC100SYH
IHC100ZNH

© Copyright, Alliance Laundry Systems LLC – DO NOT COPY or TRANSMIT

Cabinet Freestanding Washer-Extractor Product Overview

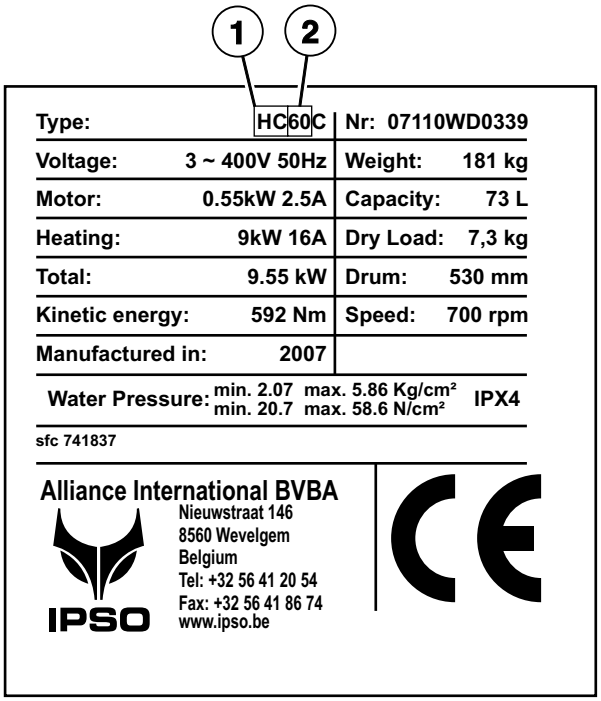

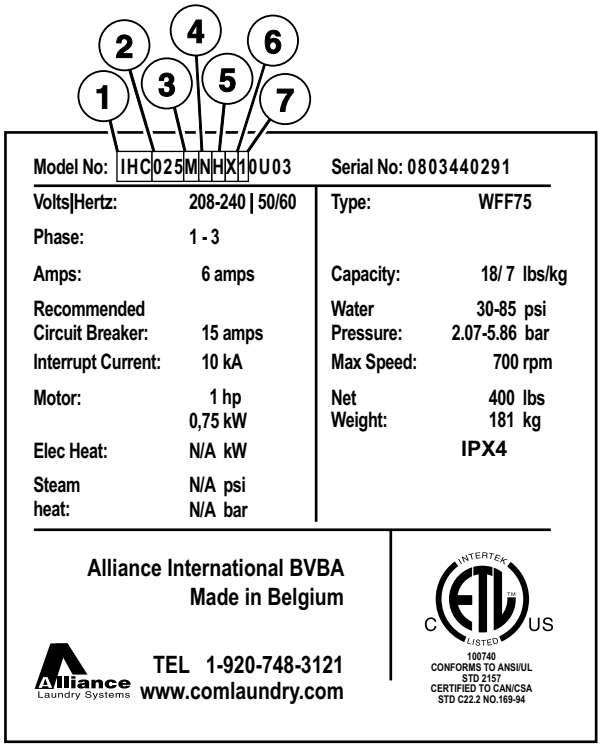

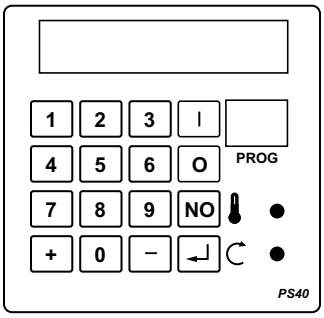

PS40

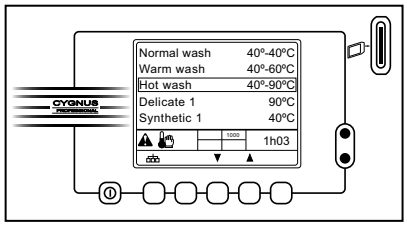

Cygnus Professional

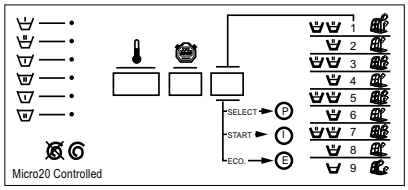

Micro 20

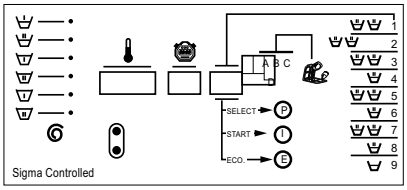

Sigma

CFD297P_D0902

© Copyright, Alliance Laundry Systems LLC – DO NOT COPY or TRANSMIT

Cabinet Freestanding Washer-Extractor Product Overview

REF	PART NO.	DESCRIPTION	COMMENTS
1	-	Product Family	CHC HC IHC
2	-	Capacity	12 18 25 60 65 75 100
3	-	Control	A (PS40F) Cygnus-Comm Cygnus-Prem Cygnus-Standard M (Micro-20) S (Sigma) Z (Cygnus-Pro)
4	-	Actuation	C (Coin Drop Meter) D (Dual Coin Drop) E (Electonic Drop) L (Prep for Remote or Central Pay) N (Non-Coin) R (Smart Card Ready) X (Prep for Coin) Y (Card Ready)
5	-	Speed	H (High Speed)
6	-	Voltage	N (440-480/50-60/3/3) P (380-415/50-60/3/3) Q (208-240/50-60/3/3) X (200-240/50-60/1/3)
7	-	Design	1

© Copyright, Alliance Laundry Systems LLC – DO NOT COPY or TRANSMIT

Frame

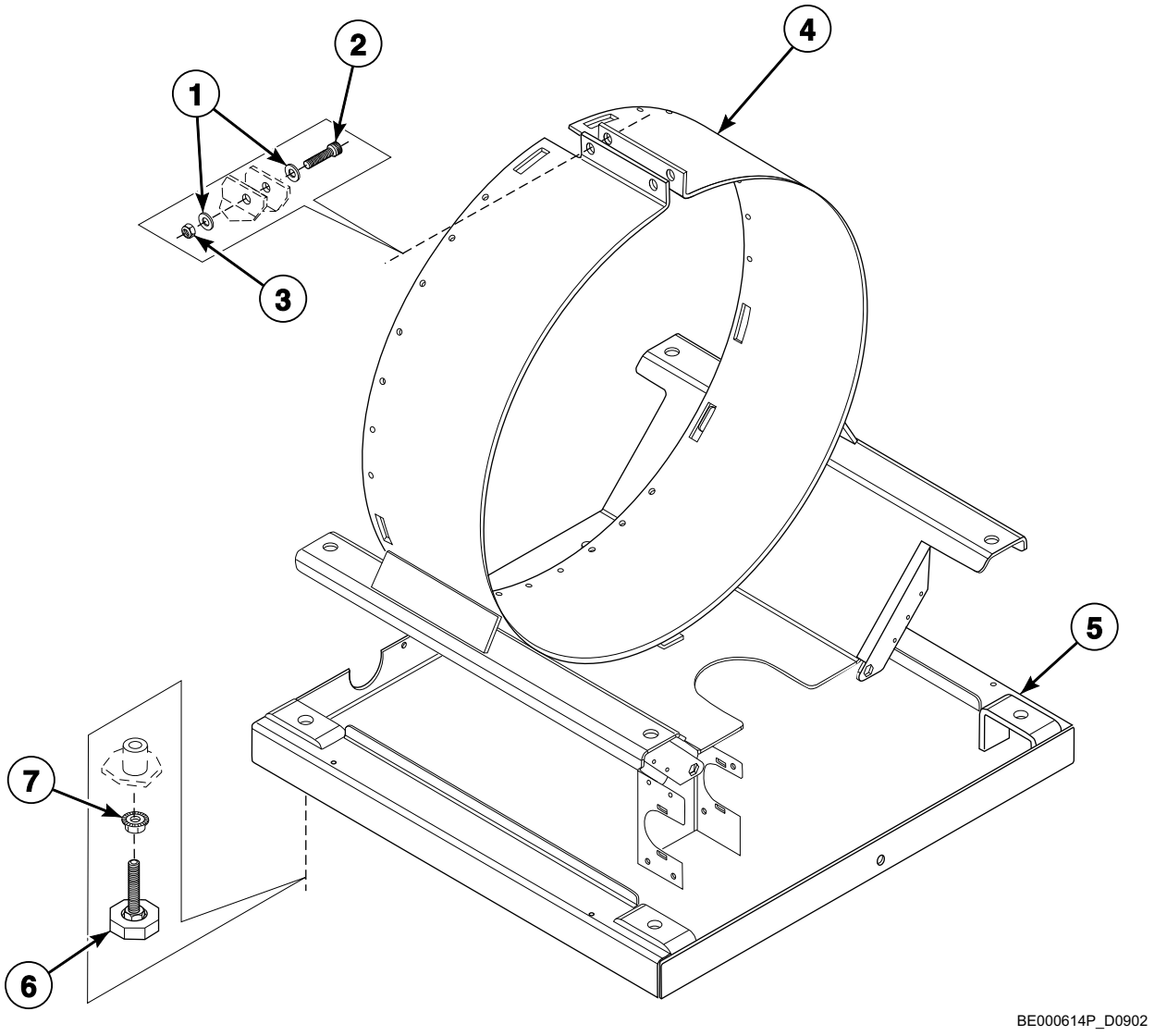

© Copyright, Alliance Laundry Systems LLC – DO NOT COPY or TRANSMIT

Frame

REF	PART NO.	DESCRIPTION	COMMENTS
1	201/00005/00	Washer	
2	206/00053/00	Screw	
3	204/00111/00	Nut	
4	152/00104/00	Tub Support	*65 models
	152/00105/00	Tub Support	*18 and *75 models
	152/00106/00	Tub Support	*25 and *100 models
	152/00122/00	Tub Support	*12 and *60 models
5	152/00101/50	Frame	*18, *65 and *75 models
	152/00102/50	Frame	*25 and *100 models
	152/00119/50	Frame	*12 and *60 models
6	252/00006/00	Leveling Leg	
7	206/00106/00	Nut	

© Copyright, Alliance Laundry Systems LLC – DO NOT COPY or TRANSMIT

Shock Absorber

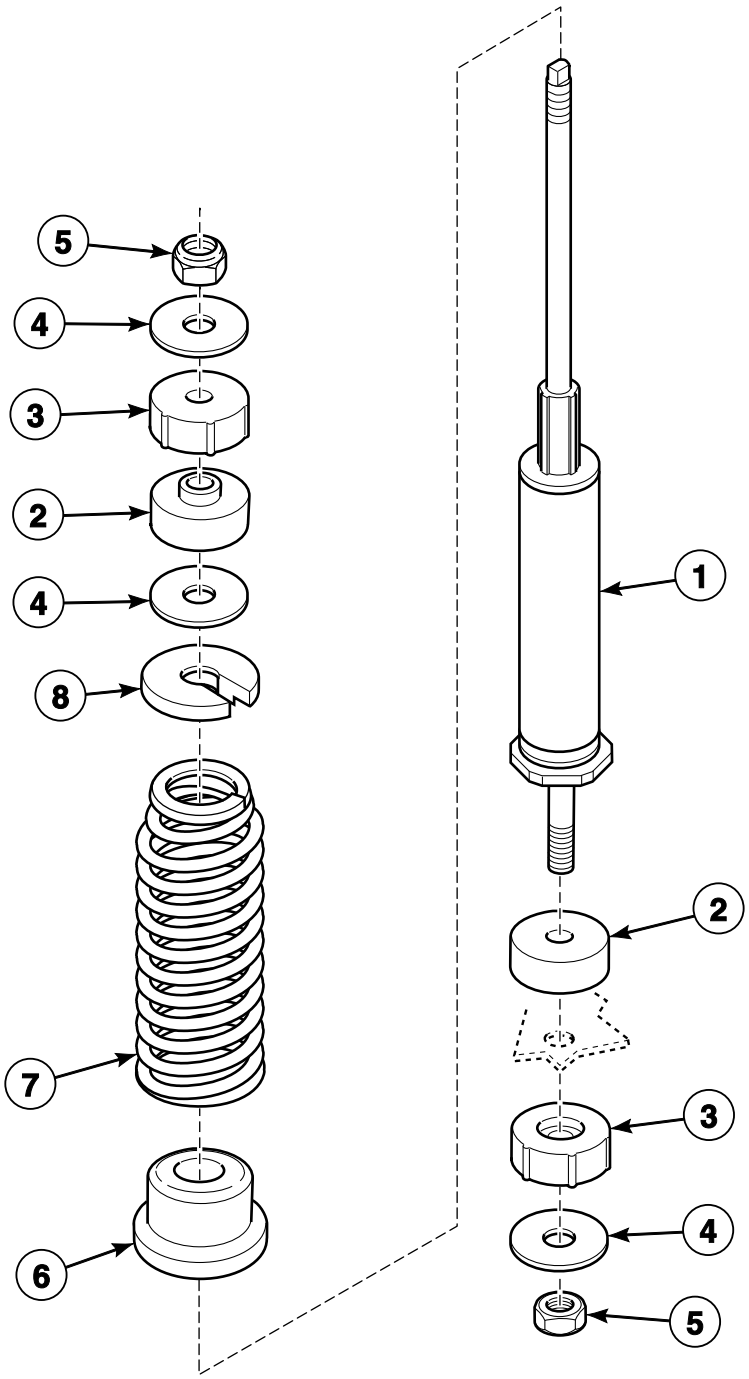

BE000626P_D0902

© Copyright, Alliance Laundry Systems LLC – DO NOT COPY or TRANSMIT

Shock Absorber

REF	PART NO.	DESCRIPTION	COMMENTS
1	247/00002/02	Shock Absorber	
	247/00003/00	Shock Absorber	Includes items 1, 2, 4, 6, 8 and 247/00002/01 Suspension Spring
2	247/00006/00	Fastening Rubber	
3	247/00007/00	Fastening Rubber	
4	201/00015/00	Washer	
5	204/00110/00	Nut	
6	247/00001/03	Spring Seat Bottom	
7	247/00009/00	Suspension Spring	Red; 5 mm diameter
	247/00002/01	Suspension Spring	Blue; 5.5 mm diameter
	247/00001/01	Suspension Spring	Black; 4.8 mm diameter
	247/00002/03	Shock Absorber	Includes items 2, 4 and 247/00009/00 Suspension Spring
	247/00002/00	Shock Absorber	Includes items 2, 4 and 247/00001/01 Suspension Spring
8	247/00001/04	Spring Holder Top	

© Copyright, Alliance Laundry Systems LLC – DO NOT COPY or TRANSMIT

Shell and Basket (Drawing 1 of 4)

*12 and *60 Models Through Serial No. 07030H10331
*65 Models Through Serial No. 07030H20366
*18 and *75 Models Through Serial No. 07030H30253
*25 and *100 Models Through Serial No. 07030H40276

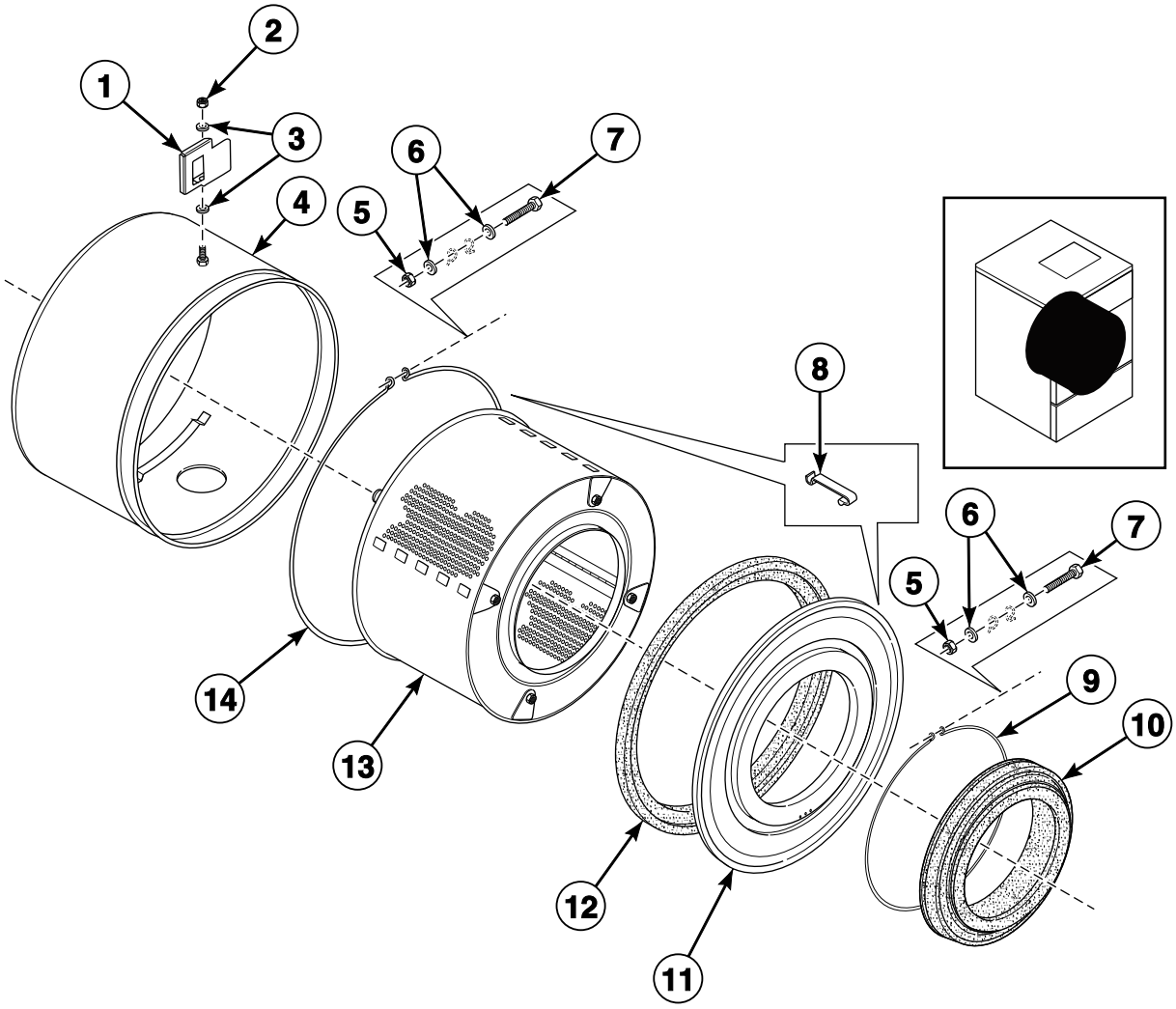

BE000615P_D0902

© Copyright, Alliance Laundry Systems LLC – DO NOT COPY or TRANSMIT

Shell and Basket (Drawing 1 of 4)

REF	PART NO.	DESCRIPTION	COMMENTS
1	111/01854/00	Tilt Detector Plate	
2	204/00110/00	Nut	
3	201/00010/00	Washer	
4	B12328001	Outer Tub	*65 models; Electric heat
	B12328101	Outer Tub	*65 models; Boiler fed
	B12328301	Outer Tub	*18 and *75 models; Electric heat
	B12328401	Outer Tub	*18 and *75 models; Boiler fed
	117/00202/00	Outer Tub	*25 and *100 models; Electric heat
	B12328701	Outer Tub	*25 and *100 models; Boiler fed
	B12327701	Outer Tub	*12 and *60 models; Electric heat
	B12327801	Outer Tub	*12 and *60 models; Boiler fed
5	204/00009/00	Nut	
6	202/00003/00	Washer	
7	206/00011/00	Bolt	
8	217/00008/00	Tub Front Panel Clip	
9	238/00017/00	Clamp	
10	255/00123/00	Boot	
11	118/00054/03	Tub Front Panel	
12	B12351601	Tub Front Gasket	
13	111/01806/00	Cylinder and Shaft Assembly	*65 models
	111/01807/00	Cylinder and Shaft Assembly	*18 and *75 models
	B12326101	Drum and Axle	*25 and *100 models
	111/01915/00	Cylinder	*12 and *60 models
14	217/00007/00	Tub Front Ring Clamp	

© Copyright, Alliance Laundry Systems LLC – DO NOT COPY or TRANSMIT

Shell and Basket (Drawing 2 of 4)

*12 and *60 Models Starting Serial No. 07030H10332 Through Serial No. 07040H10387
*65 Models Starting Serial No. 07030H20367 Through Serial No. 07040H20415
*18 and *75 Models Starting Serial No. 07030H30254 Through Serial No. 07040H30274
*25 and *100 Models Starting Serial No. 07030H40277 Through Serial No. 07040H40232

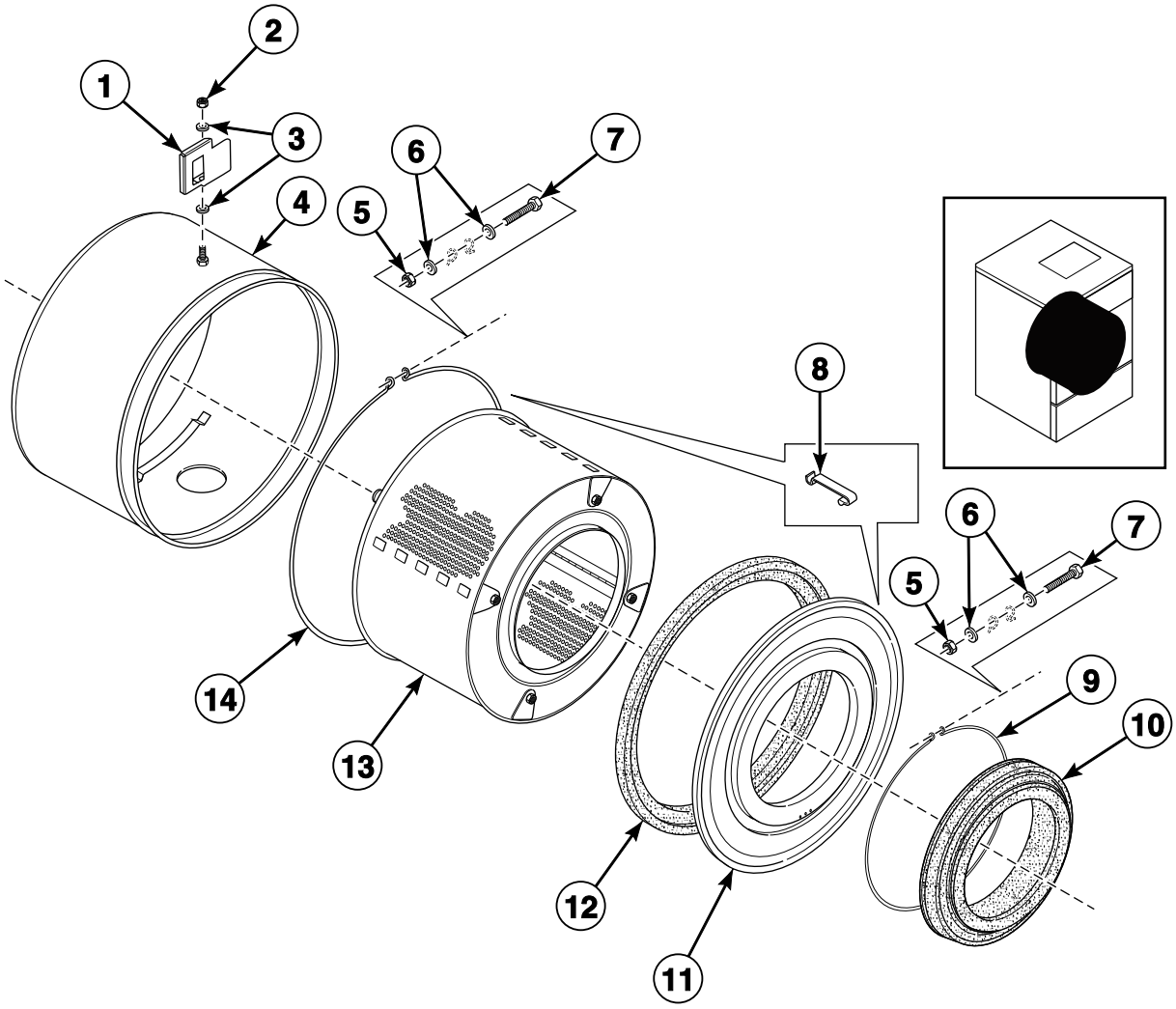

BE000615P_D0902

© Copyright, Alliance Laundry Systems LLC – DO NOT COPY or TRANSMIT

Shell and Basket (Drawing 2 of 4)

REF	PART NO.	DESCRIPTION	COMMENTS
1	111/01854/00	Tilt Detector Plate	
2	204/00110/00	Nut	
3	201/00010/00	Washer	
4	B12328001	Outer Tub	*65 models; Electric heat
	B12328101	Outer Tub	*65 models; Boiler fed
	B12328301	Outer Tub	*18 and *75 models; Electric heat
	B12328401	Outer Tub	*18 and *75 models; Boiler fed
	117/00202/00	Outer Tub	*25 and *100 models; Electric heat
	B12328701	Outer Tub	*25 and *100 models; Boiler fed
	B12327701	Outer Tub	*12 and *60 models; Electric heat
	B12327801	Outer Tub	*12 and *60 models; Boiler fed
5	204/00009/00	Nut	
6	202/00003/00	Washer	
7	206/00011/00	Bolt	
8	217/00008/00	Tub Front Panel Clip	
9	238/00017/00	Clamp	
10	255/00123/00	Boot	
11	118/00054/03	Tub Front Panel	
12	B12351601	Tub Front Gasket	
13	111/01915/00	Cylinder	*12 and *60 models
	B12325701	Drum and Axle	*65 models
	111/01917/00	Cylinder and Shaft Assembly	*18 and *75 models
	B12326101	Drum and Axle	*25 and *100 models
14	217/00007/00	Tub Front Ring Clamp	

© Copyright, Alliance Laundry Systems LLC – DO NOT COPY or TRANSMIT

Shell and Basket (Drawing 3 of 4)

*12 and *60 Models Starting Serial No. 07040H10388 Through 6/21/09
*65 Models Starting Serial No. 07040H20416 Through 6/21/09
*18 and *75 Models Starting Serial No. 07040H30275 Through 6/21/09
*25 and *100 Models Starting Serial No. 07040H40233 Through 6/21/09

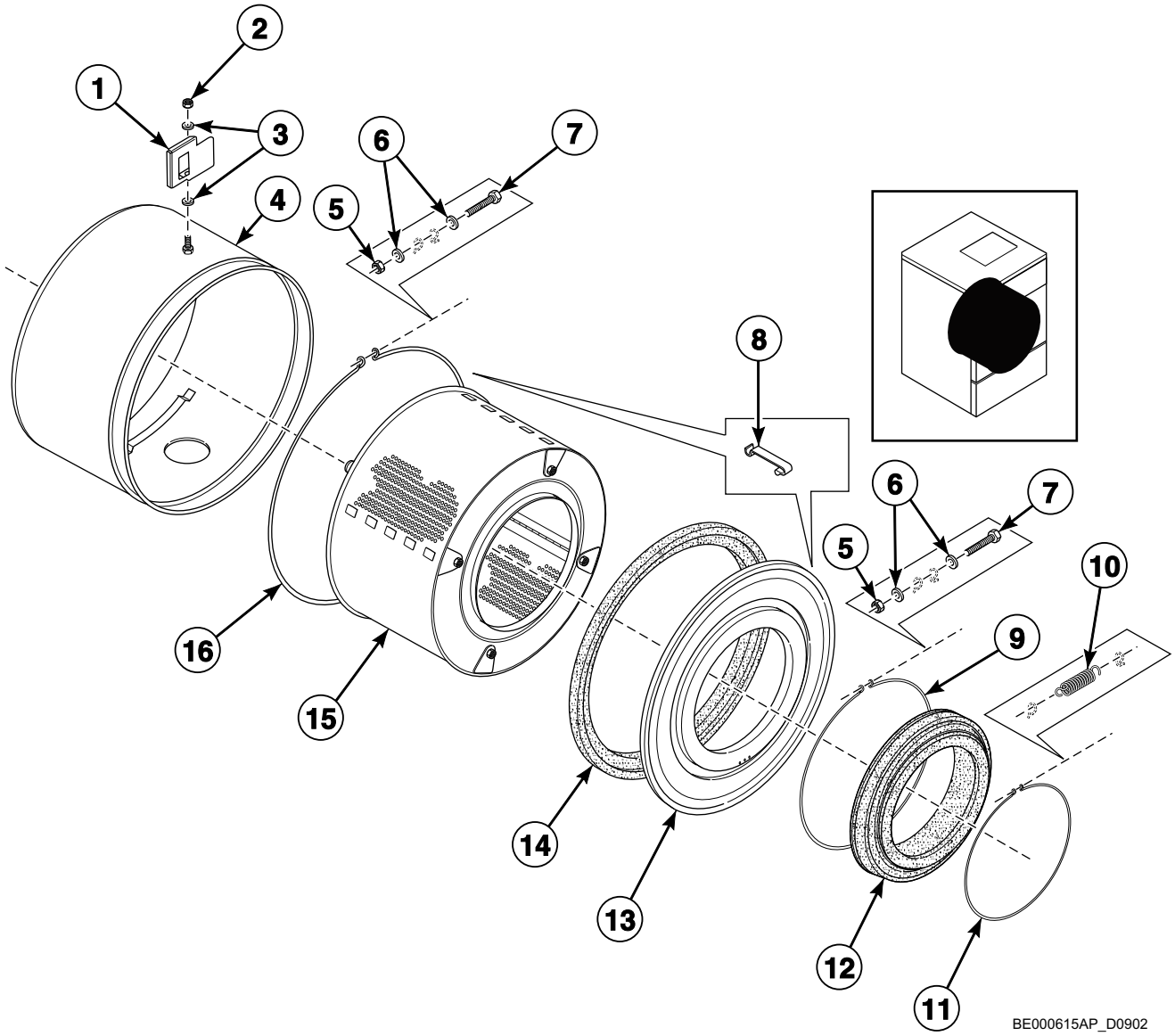

© Copyright, Alliance Laundry Systems LLC – DO NOT COPY or TRANSMIT

Shell and Basket (Drawing 3 of 4)

REF	PART NO.	DESCRIPTION	COMMENTS
1	111/01854/00	Tilt Detector Plate	
2	204/00110/00	Nut	
3	201/00010/00	Washer	
4	B12328001	Outer Tub	*65 models; Electric heat
	B12328101	Outer Tub	*65 models; Boiler fed
	B12328301	Outer Tub	*18 and *75 models; Electric heat
	B12328401	Outer Tub	*18 and *75 models; Boiler fed
	117/00202/00	Outer Tub	*25 and *100 models; Electric heat
	B12328701	Outer Tub	*25 and *100 models; Boiler fed
	B12327701	Outer Tub	*12 and *60 models; Electric heat
	B12327801	Outer Tub	*12 and *60 models; Boiler fed
5	204/00009/00	Nut	
6	202/00003/00	Washer	
7	206/00011/00	Bolt	
8	217/00008/00	Tub Front Panel Clip	
9	238/00017/00	Clamp	
10	238/00014/00	Spring	
11	238/00013/00	Fastening Ring	
12	255/00123/00	Boot	
13	118/00054/03	Tub Front Panel	
14	B12351601	Tub Front Gasket	
15	111/01915/00	Cylinder	*12 and *60 models
	B12325701	Drum and Axle	*65 models
	111/01917/00	Cylinder and Shaft Assembly	*18 and *75 models
	B12326101	Drum and Axle	*25 and *100 models
16	217/00007/00	Tub Front Ring Clamp	

© Copyright, Alliance Laundry Systems LLC – DO NOT COPY or TRANSMIT

Shell and Basket (Drawing 4 of 4)

Models Starting 6/22/09

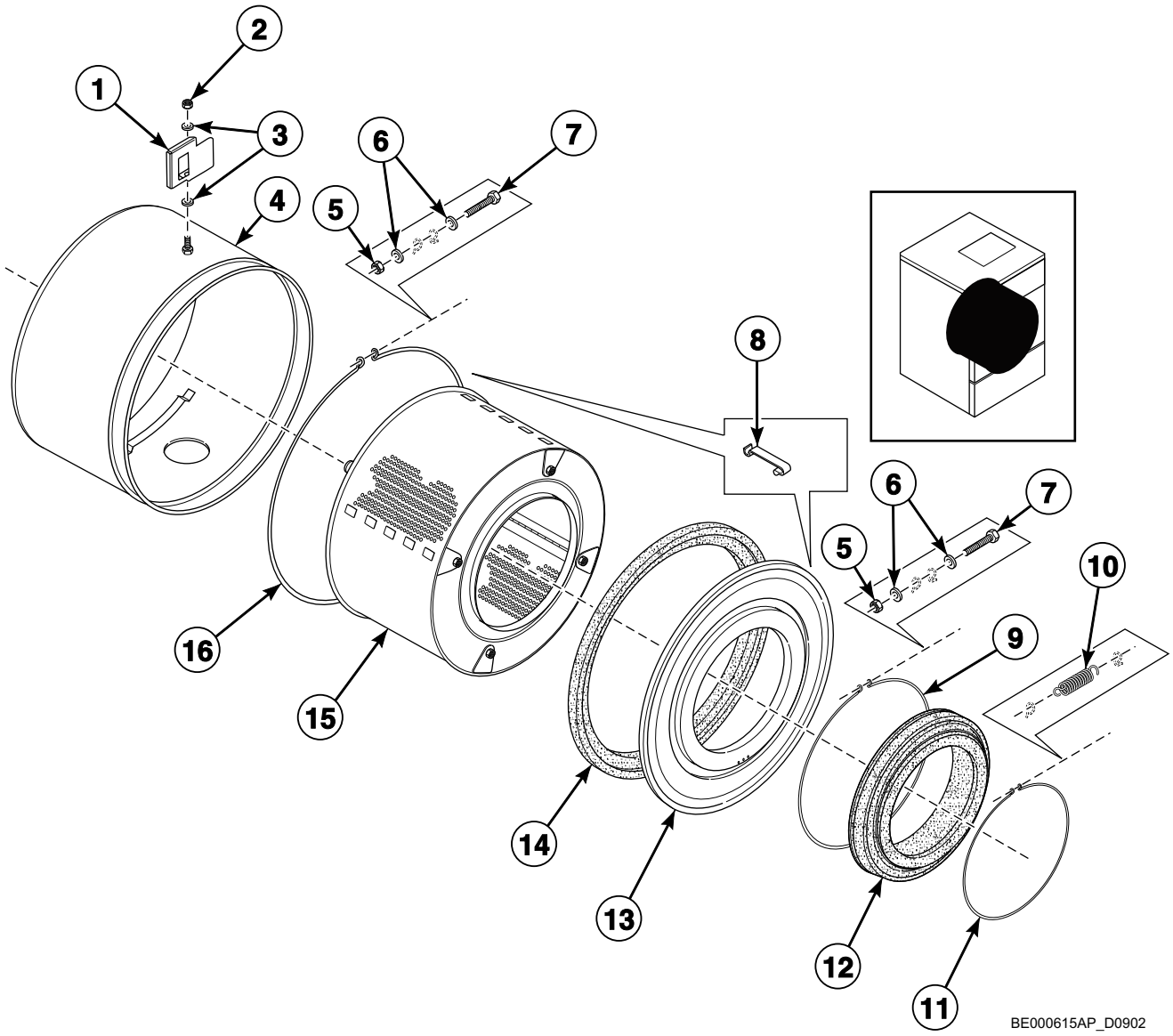

© Copyright, Alliance Laundry Systems LLC – DO NOT COPY or TRANSMIT

Shell and Basket (Drawing 4 of 4)

REF	PART NO.	DESCRIPTION	COMMENTS
1	111/01854/00	Tilt Detector Plate	
2	204/00110/00	Nut	
3	201/00010/00	Washer	
4	B12328001	Outer Tub	*65 models; Electric heat
	B12328101	Outer Tub	*65 models; Boiler fed
	B12328301	Outer Tub	*18 and *75 models; Electric heat
	B12328401	Outer Tub	*18 and *75 models; Boiler fed
	B12328601	Outer Tub	*25 and *100 models; Electric heat
	B12328701	Outer Tub	*25 and *100 models; Boiler fed
	B12327701	Outer Tub	*12 and *60 models; Electric heat
	B12327801	Outer Tub	*12 and *60 models; Boiler fed
5	204/00009/00	Nut	
6	201/00007/00	Washer	
7	206/00032/00	Bolt	
8	217/00008/00	Tub Front Panel Clip	
9	238/00017/00	Clamp	
10	238/00014/00	Spring	
11	238/00013/00	Fastening Ring	
12	255/00123/00	Boot	
13	118/00054/03	Tub Front Panel	
14	B12351601	Tub Front Gasket	
15	111/01915/00	Cylinder	*12 and *60 models through 1/30/11
	B12542501	Basket Kit	*12 and *60 models through 1/30/11; Includes B12379401 Cylinder and 3881P Bearing Kit
	B12379401	Cylinder	*12 and *60 models starting 1/31/11
	B12325701	Drum and Axle	*65 models through 1/30/11
	B12542601	Basket Kit	*65 models through 1/30/11; Includes B12379501 Basket and Shaft Assembly and 3881P Bearing Kit
	B12379501	Basket and Shaft Assembly	3 mm; *65 models starting 1/31/11
	B12379601	Basket and Shaft Assembly	9 mm; *65 models starting 1/31/11
	111/01917/00	Cylinder and Shaft Assembly	*18 and *75 models through 1/30/11
	B12542701	Basket Kit	*18 and *75 models through 1/30/11; Includes B12379701 Basket and Shaft Assembly and 3881P Bearing Kit
	B12379701	Basket and Shaft Assembly	3 mm; *18 and *75 models starting 1/31/11
	B12379801	Basket and Shaft Assembly	9 mm; *18 and *75 models starting 1/31/11
	B12326101	Drum and Axle	*25 and *100 models through 1/30/11
	B12542801	Basket Kit	*25 and *100 models through 1/30/11; Includes B12379901 Basket and Shaft Assembly and 3881P Bearing Kit
	B12379901	Basket and Shaft Assembly	3 mm; *25 and *100 models starting 1/31/11
	B12380001	Basket and Shaft Assembly	9 mm; *25 and *100 models starting 1/31/11
16	217/00007/00	Tub Front Ring Clamp	

© Copyright, Alliance Laundry Systems LLC – DO NOT COPY or TRANSMIT

Bearing Housing - Models Through 1/30/11

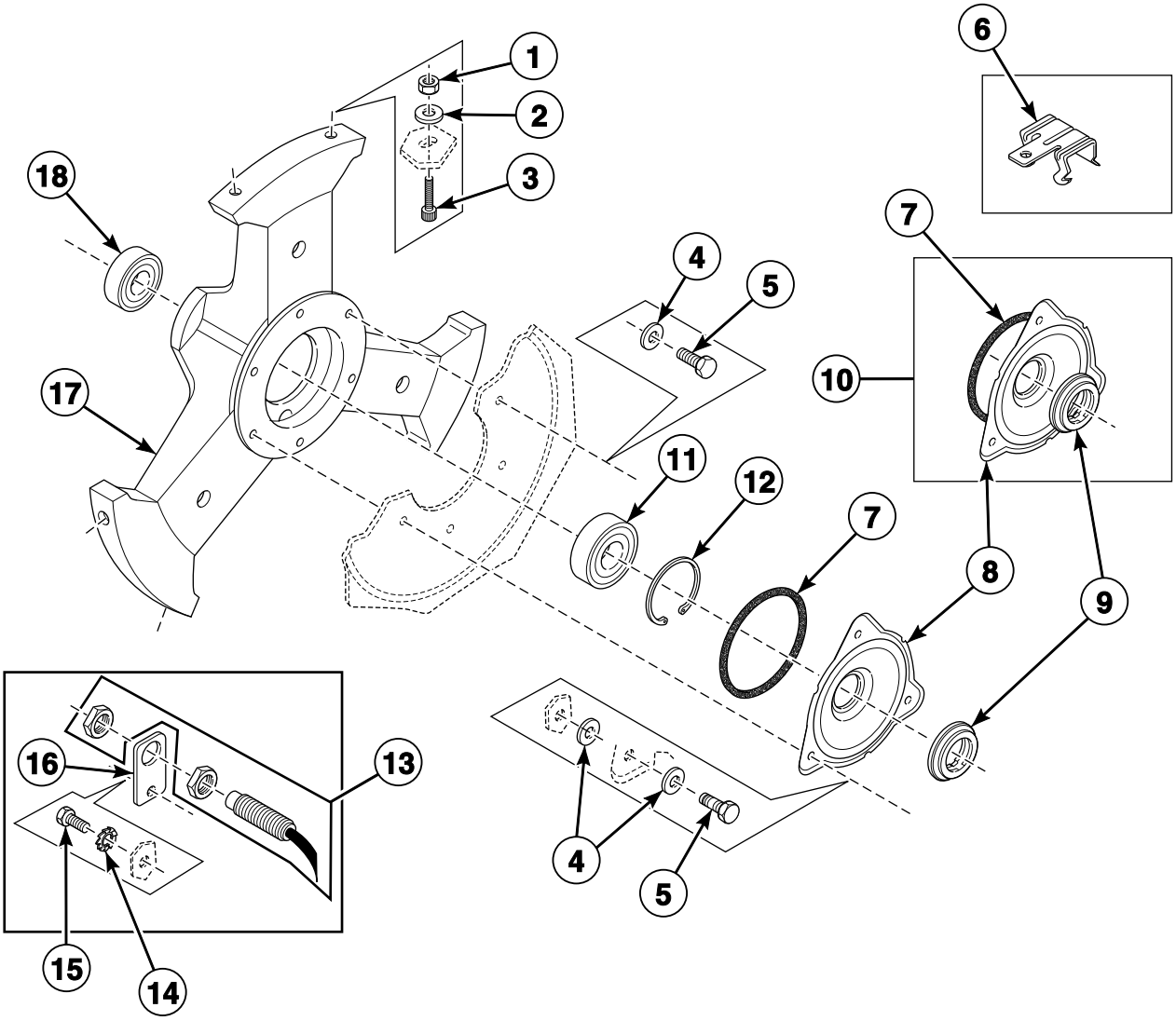

BE000616P_D0902

© Copyright, Alliance Laundry Systems LLC – DO NOT COPY or TRANSMIT

Bearing Housing - Models Through 1/30/11

REF	PART NO.	DESCRIPTION	COMMENTS
	387P4	Bearing Replacement Kit	Includes items 4, 5, 10, 11, 18, 217/00004/00 Counter Ring, 223/00242/10 Tub Gasket and F8382001P Deflector Inlet
	380P3	Bearing Replacement Tool Kit	
1	204/00111/00	Nut	
2	201/00012/00	Washer	
3	206/00053/00	Screw	
4	201/00201/00	Washer	
5	205/00102/00	Bolt	
6	224/00051/00	Caddy Bracket	4H58-4
	224/00052/00	Caddy Bracket	4H912
7	217/00002/00	O-Ring	
8	117/00001/00	Seal Cover	
9	217/00003/00	Shaft Seal	
10	117/00001/01	Shaft Seal Holder	
11	216/00001/02	Ball Bearing	
12	212/00038/00	Retaining Ring	
13	209/00400/00	Speed Detector	
14	203/00004/00	Washer	
15	205/00104/00	Bolt	
16	152/00055/00	Speed Detector Bracket	
17	152/00117/00	Bearing Housing Assembly	
	152/10117/01	Bearing Housing Assembly	Includes items 11 and 18
18	215/00001/03	Ball Bearing	

© Copyright, Alliance Laundry Systems LLC – DO NOT COPY or TRANSMIT

Bearing Housing - Models Starting 1/31/11

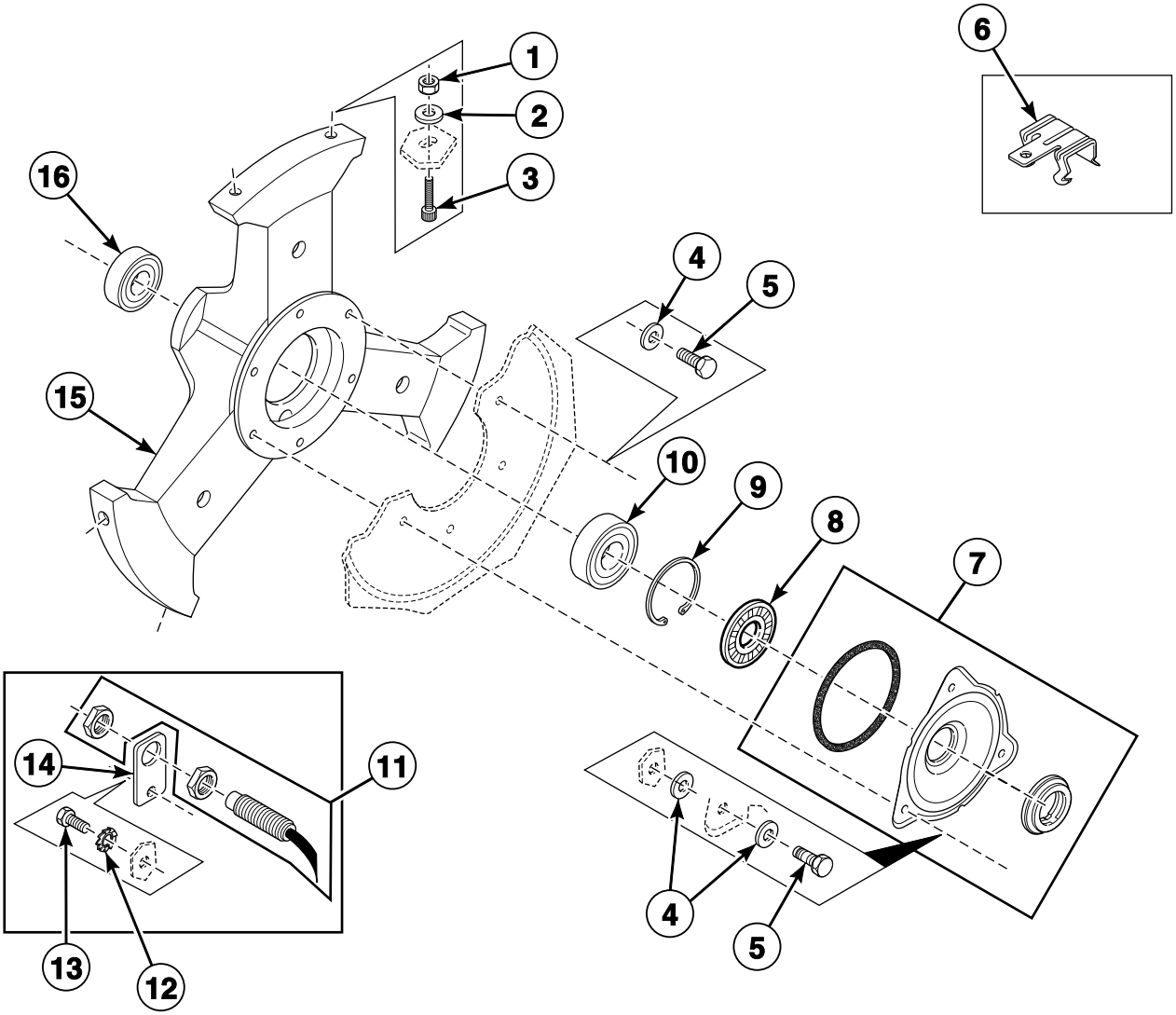

CFD646P_D0902

© Copyright, Alliance Laundry Systems LLC – DO NOT COPY or TRANSMIT

Bearing Housing - Models Starting 1/31/11

REF	PART NO.	DESCRIPTION	COMMENTS
	380P3	Bearing Replacement Tool Kit	
	3881P	Bearing Kit	Includes items 4, 5, 7, 8, 10, 16, 217/00004/00 Counter Ring, 223/00242/10 Tub Gasket
1	204/00111/00	Nut	
2	201/00012/00	Washer	
3	206/00053/00	Screw	
4	201/00201/00	Washer	
5	205/00102/00	Bolt	
6	224/00051/00	Caddy Bracket	4H58-4
	224/00052/00	Caddy Bracket	4H912
7	B12333601	Seal Plate Assembly	
8	B12332201	Lip Seal	
9	212/00038/00	Retaining Ring	
10	216/00001/02	Ball Bearing	
11	209/00400/00	Speed Detector	
12	203/00004/00	Washer	
13	205/00104/00	Bolt	
14	152/00055/00	Speed Detector Bracket	
15	152/00117/00	Bearing Housing Assembly	
	152/10117/01	Bearing Housing Assembly	Includes items 10 and 16
16	215/00001/03	Ball Bearing	

© Copyright, Alliance Laundry Systems LLC – DO NOT COPY or TRANSMIT

Basket, Pulley and Belt (Drawing 1 of 2)

*12 and *60 Models Through Serial No. 07030H10331
*65 Models Through Serial No. 07030H20366
*18 and *75 Models Through Serial No. 07030H30253
*25 and *100 Models Through Serial No. 07030H40276

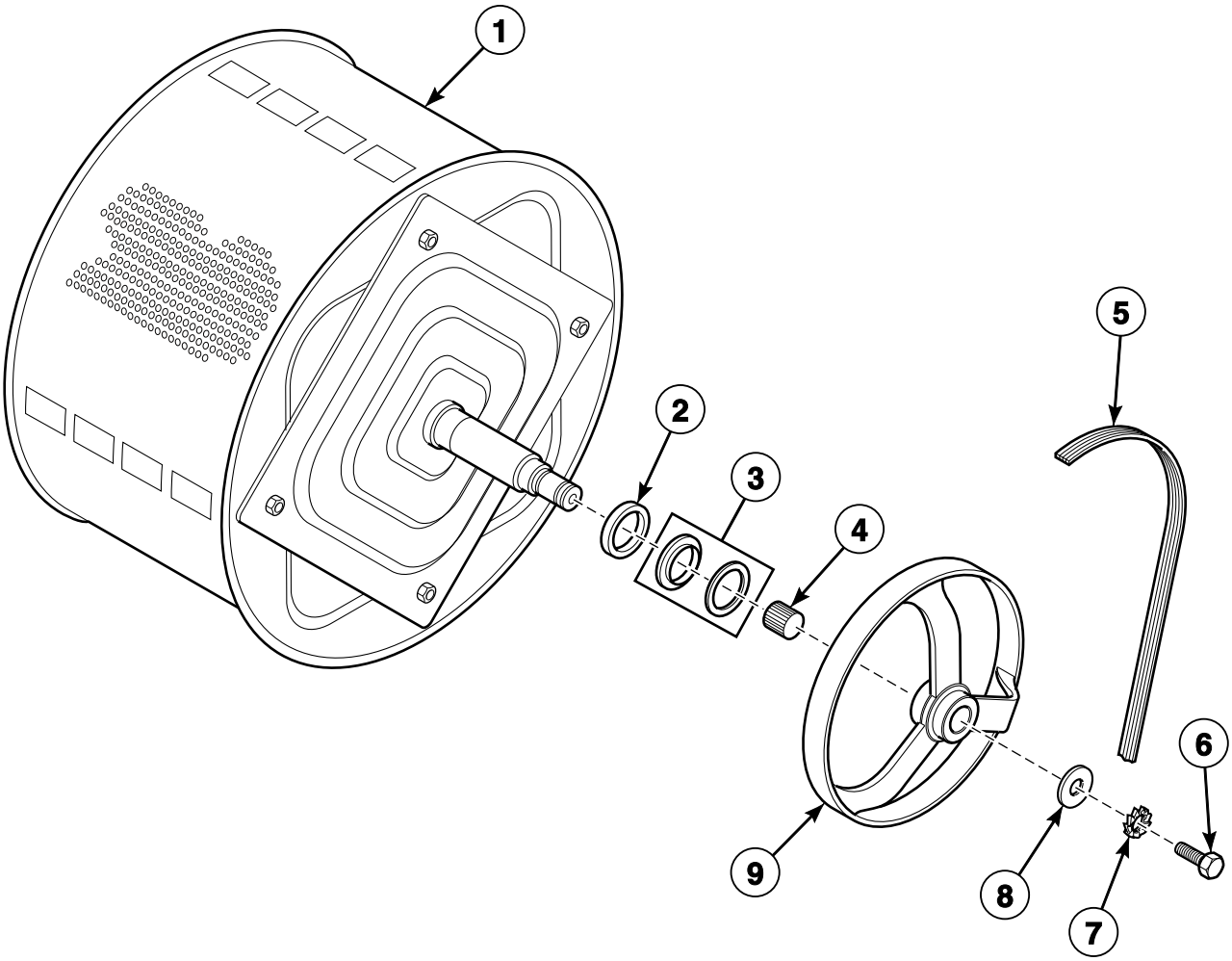

BE000617P_D0902

© Copyright, Alliance Laundry Systems LLC – DO NOT COPY or TRANSMIT

Basket, Pulley and Belt (Drawing 1 of 2)

REF	PART NO.	DESCRIPTION	COMMENTS
1	111/01806/00	Cylinder and Shaft Assembly	*65 models
	111/01807/00	Cylinder and Shaft Assembly	*18 and *75 models
	B12326101	Drum and Axle	*25 and *100 models
	111/01915/00	Cylinder	*12 and *60 models
2	217/00100/00	Bearing Spacer	
3	217/00004/00	Counter Ring	
4	215/00004/00	Tolerance Ring	
5	255/00013/00	Belt	
6	206/00005/00	Bolt	
7	203/00002/00	Washer	
8	201/00015/00	Washer	
9	255/00117/00	Pulley	

© Copyright, Alliance Laundry Systems LLC – DO NOT COPY or TRANSMIT

Basket, Pulley and Belt (Drawing 2 of 2)

*12 and *60 Models Starting Serial No. 07030H10332
*65 Models Starting Serial No. 07030H20367
*18 and *75 Models Starting Serial No. 07030H30254
*25 and *100 Models Starting Serial No. 07030H40277

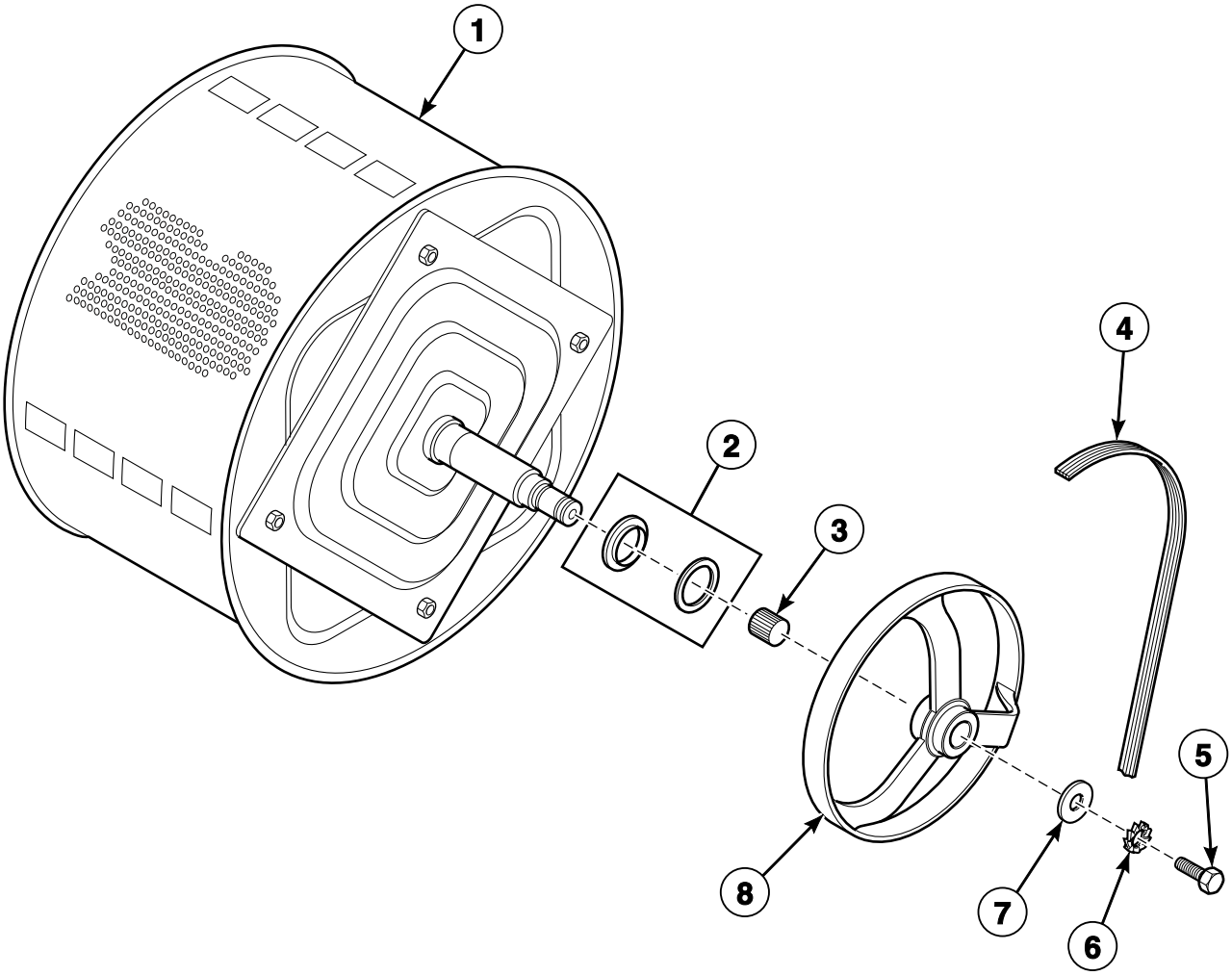

BE000839P_D0902

© Copyright, Alliance Laundry Systems LLC – DO NOT COPY or TRANSMIT

Basket, Pulley and Belt (Drawing 2 of 2)

REF	PART NO.	DESCRIPTION	COMMENTS
1	111/01915/00	Cylinder	*12 and *60 models through 1/30/11
	B12542501	Basket Kit	*12 and *60 models through 1/30/11; Includes B12379401 Cylinder and 3881P Bearing Kit
	B12379401	Cylinder	*12 and *60 models starting 1/31/11
	B12325701	Drum and Axle	*65 models through 1/30/11
	B12542601	Basket Kit	*65 models through 1/30/11; Includes B12379501 Basket and Shaft Assembly and 3881P Bearing Kit
	B12379501	Basket and Shaft Assembly	*65 models starting 1/31/11; 3 mm
	B12379601	Basket and Shaft Assembly	*65 models starting 1/31/11; 9 mm
	111/01917/00	Cylinder and Shaft Assembly	*18 and *75 models through 1/30/11
	B12542701	Basket Kit	*18 and *75 models through 1/30/11; Includes B12379701 Basket and Shaft Assembly and 3881P Bearing Kit
	B12379701	Basket and Shaft Assembly	*18 and *75 models starting 1/31/11; 3 mm
	B12379801	Basket and Shaft Assembly	*18 and *75 models starting 1/31/11; 9 mm
	B12326101	Drum and Axle	*25 and *100 models through 1/30/11
	B12542801	Basket Kit	*25 and *100 models through 1/30/11; Includes B12379901 Basket and Shaft Assembly and 3881P Bearing Kit
	B12379901	Basket and Shaft Assembly	*25 and *100 models starting 1/31/11; 3 mm
	B12380001	Basket and Shaft Assembly	*25 and *100 models starting 1/31/11; 9 mm
2	217/00004/00	Counter Ring	
3	215/00004/00	Tolerance Ring	
4	255/00013/00	Belt	
5	206/00005/00	Bolt	
6	203/00002/00	Washer	
7	201/00015/00	Washer	
8	255/00117/00	Pulley	

© Copyright, Alliance Laundry Systems LLC – DO NOT COPY or TRANSMIT

Motor and Belt

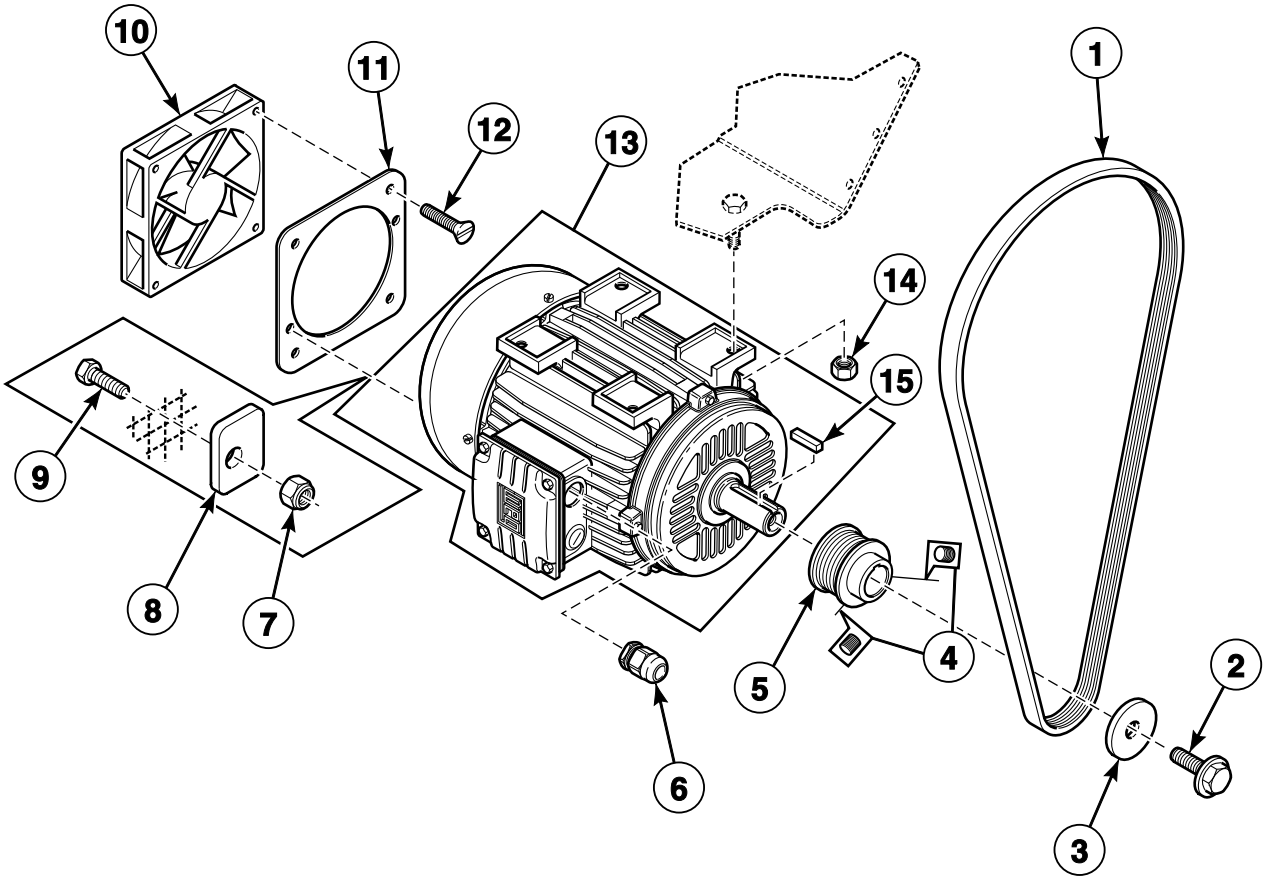

BE000618AP_D0902

© Copyright, Alliance Laundry Systems LLC – DO NOT COPY or TRANSMIT

Motor and Belt

REF	PART NO.	DESCRIPTION	COMMENTS
1	255/00013/00	Belt	
2	206/00099/00	Bolt	
3	201/00006/00	Washer	
4	206/00058/00	Screw	
5	255/00012/00	Motor Pulley	
6	211/00167/00	Cordlock	
7	204/00115/00	Nut	
8	117/00042/00	Retaining Ring	
9	206/00054/00	Bolt	
10	209/00465/00	Fan	
11	152/00044/03	Fan Plate Assembly	
12	207/00117/00	Screw	
13	B12510501	Motor	.75 kW
	255/00014/00	Motor	.55 kW
14	204/00109/00	Nut	
15	227/00126/01	Motor Key	

© Copyright, Alliance Laundry Systems LLC – DO NOT COPY or TRANSMIT

Drain Plumbing - Single Outlet Drain Piece with Water Level Detection on Drain Valve-Models Through 8/11/10

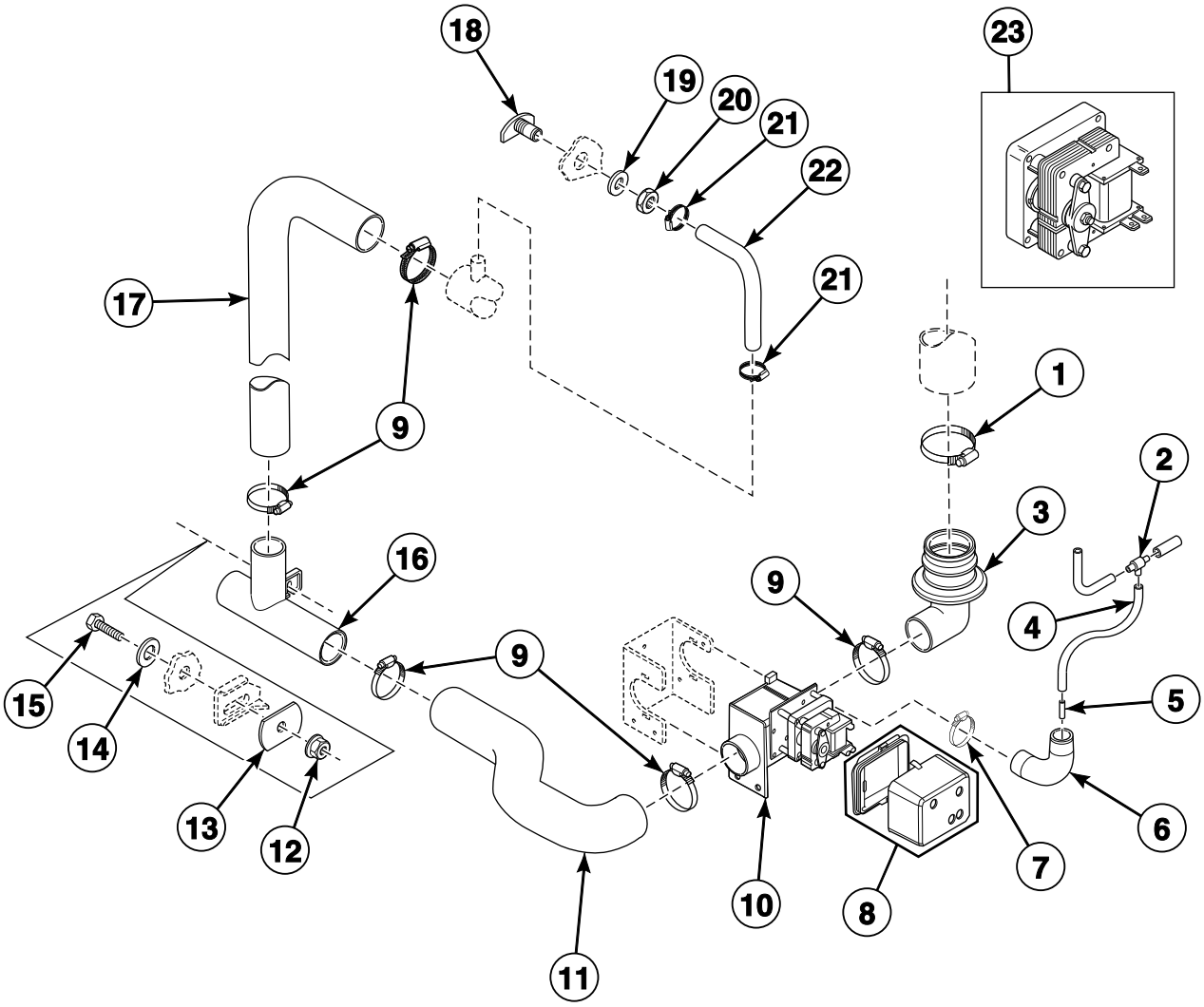

© Copyright, Alliance Laundry Systems LLC – DO NOT COPY or TRANSMIT

Drain Plumbing - Single Outlet Drain Piece with Water Level Detection on Drain Valve-Models Through 8/11/10

REF	PART NO.	DESCRIPTION	COMMENTS
1	223/00014/00	Hose Clamp	
2	223/00173/10	Pressure Switch Hose Tee	
3	223/00316/00	Trap	
4	223/00333/00	Pressure Hose	
5	223/00016/00	Hose Barb	
6	223/00210/00	Pressure Switch Elbow	
7	223/00011/00	Hose Clamp	
8	209/00643/01	Drain Valve Coil Cover	
9	223/00013/00	Hose Clamp	
10	209/00643/00	Drain Valve	
11	223/00190/00	Drain Valve Hose	*12, *18, *60, *65 and *75 models
	223/00303/00	Drain Valve Hose	*25 and *100 models
12	206/00101/00	Nut	
13	101/00007/00	Outlet Pipe Plate Assembly	
14	201/00007/00	Washer	
15	206/00033/00	Bolt	
16	223/00146/00	Drain Piece	
17	223/00150/00	Overflow Hose	*12, *18, *60, *65 and *75 models
	223/00100/00	Overflow Hose	*25 and *100 models
18	223/00001/04	Prewash and Mainwash Nozzle	
19	201/00002/00	Washer	
20	204/00201/00	Nut	
21	F200205	Hose Clamp	
22	223/00044/00	Water Hose	
23	209/00643/11	Motor	

© Copyright, Alliance Laundry Systems LLC – DO NOT COPY or TRANSMIT

Drain Plumbing - Single Outlet Drain Piece with Water Level Detection on Drain Hose-Models Starting 8/12/10

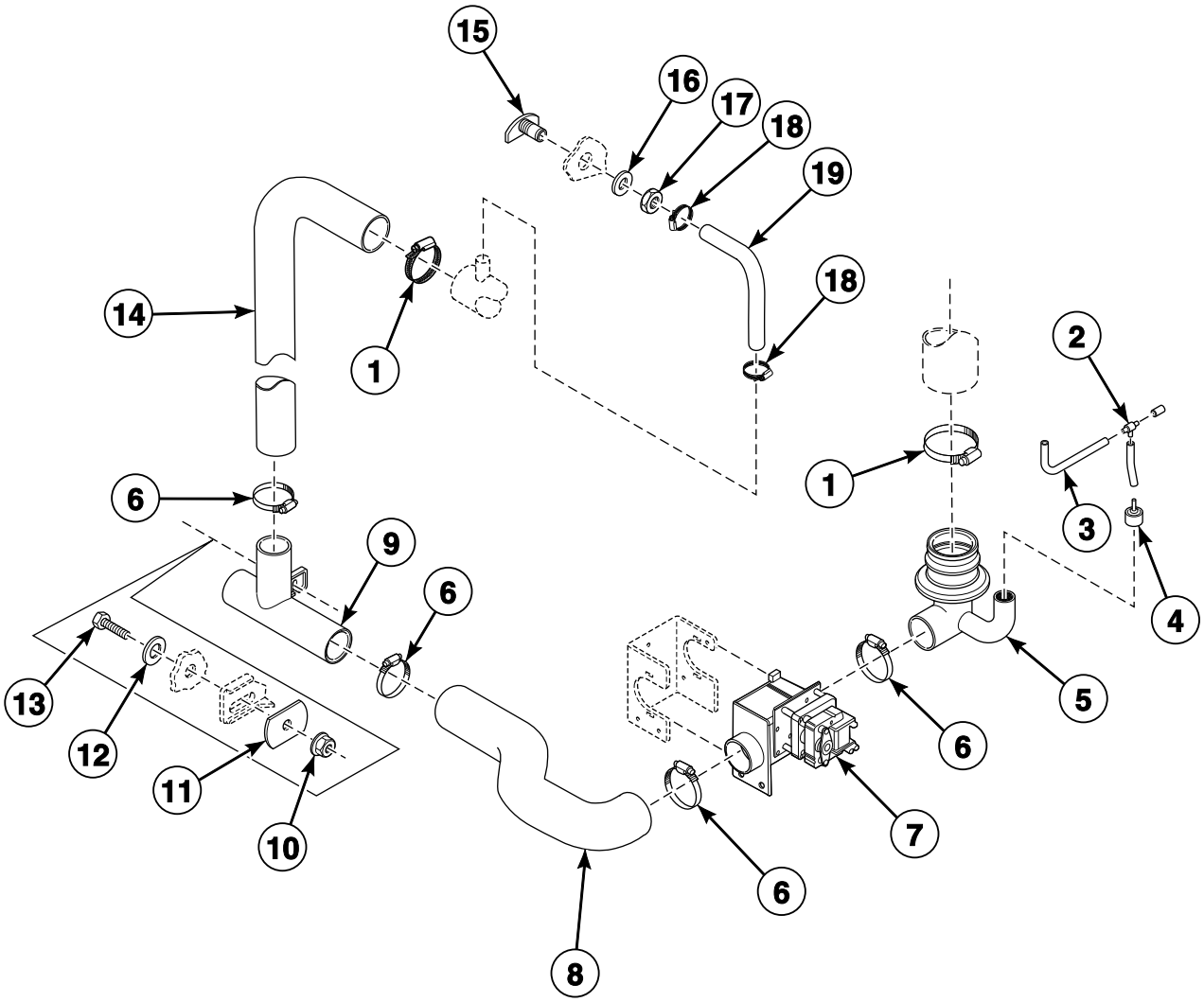

BE000619P_D0902

© Copyright, Alliance Laundry Systems LLC – DO NOT COPY or TRANSMIT

Drain Plumbing - Single Outlet Drain Piece with Water Level Detection on Drain Hose-Models Starting 8/12/10

REF	PART NO.	DESCRIPTION	COMMENTS
1	223/00014/00	Hose Clamp	
2	223/00173/10	Pressure Switch Hose Tee	
3	223/00333/00	Pressure Hose	
4	223/00035/02	Pressure Switch Cap	
5	255/00010/00	Tub to Drain Valve Hose	
6	223/00013/00	Hose Clamp	
7	209/00463/00	Drain Valve	
8	223/00190/00	Drain Valve Hose	*12, *18, *60, *65 and *75 models
	223/00303/00	Drain Valve Hose	*25 and *100 models
9	223/00146/00	Drain Piece	
10	206/00101/00	Nut	
11	101/00007/00	Outlet Pipe Plate Assembly	
12	201/00007/00	Washer	
13	206/00033/00	Bolt	
14	223/00150/00	Overflow Hose	
15	223/00001/04	Prewash and Mainwash Nozzle	
16	201/00002/00	Washer	
17	204/00201/00	Nut	
18	F200205	Hose Clamp	
19	223/00044/01	Water Hose	

© Copyright, Alliance Laundry Systems LLC – DO NOT COPY or TRANSMIT

Drain Plumbing - Dual Outlet Drain Piece with Water Level Detection on Drain Hose

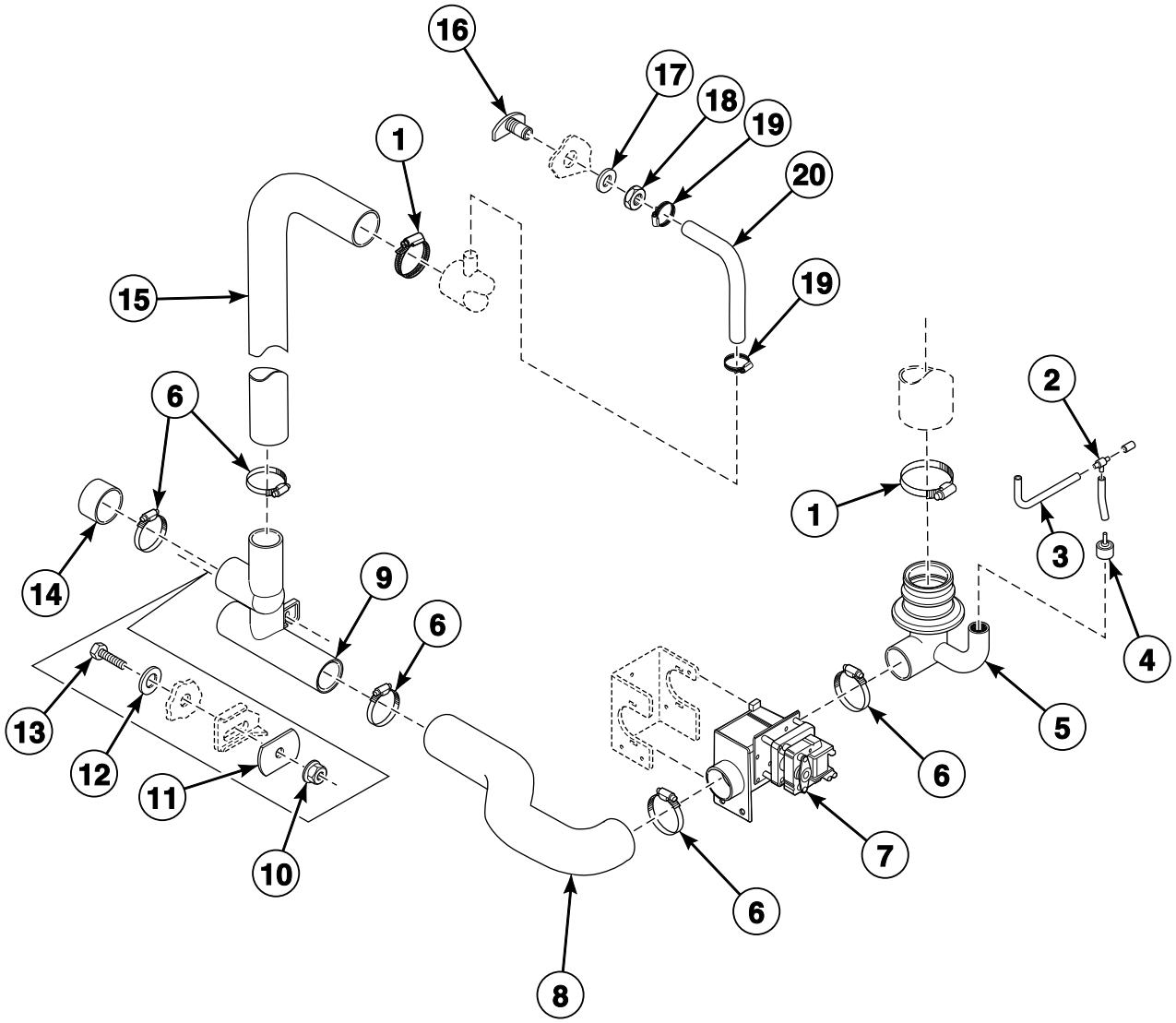

BE000619AP_D0902

© Copyright, Alliance Laundry Systems LLC – DO NOT COPY or TRANSMIT

Drain Plumbing - Dual Outlet Drain Piece with Water Level Detection on Drain Hose

REF	PART NO.	DESCRIPTION	COMMENTS
1	223/00014/00	Hose Clamp	
2	223/00173/10	Pressure Switch Hose Tee	
3	223/00333/00	Pressure Hose	
4	223/00035/02	Pressure Switch Cap	
5	255/00010/00	Tub to Drain Valve Hose	
6	223/00013/00	Hose Clamp	
7	209/00463/00	Drain Valve	
8	223/00190/00	Drain Valve Hose	*12, *18, *60, *65 and *75 models
	223/00303/00	Drain Valve Hose	*25 and *100 models
9	223/00297/00	Drain Pipe	
10	206/00101/00	Nut	
11	101/00007/00	Outlet Pipe Plate Assembly	
12	201/00007/00	Washer	
13	206/00033/00	Bolt	
14	223/00294/00	Drain Pipe Cap	
15	223/00150/00	Overflow Hose	
16	223/00001/04	Prewash and Mainwash Nozzle	
17	201/00002/00	Washer	
18	204/00201/00	Nut	
19	F200205	Hose Clamp	
20	223/00044/01	Water Hose	

© Copyright, Alliance Laundry Systems LLC – DO NOT COPY or TRANSMIT

Drain Plumbing - Models with Pump Drain Through 1/26/05

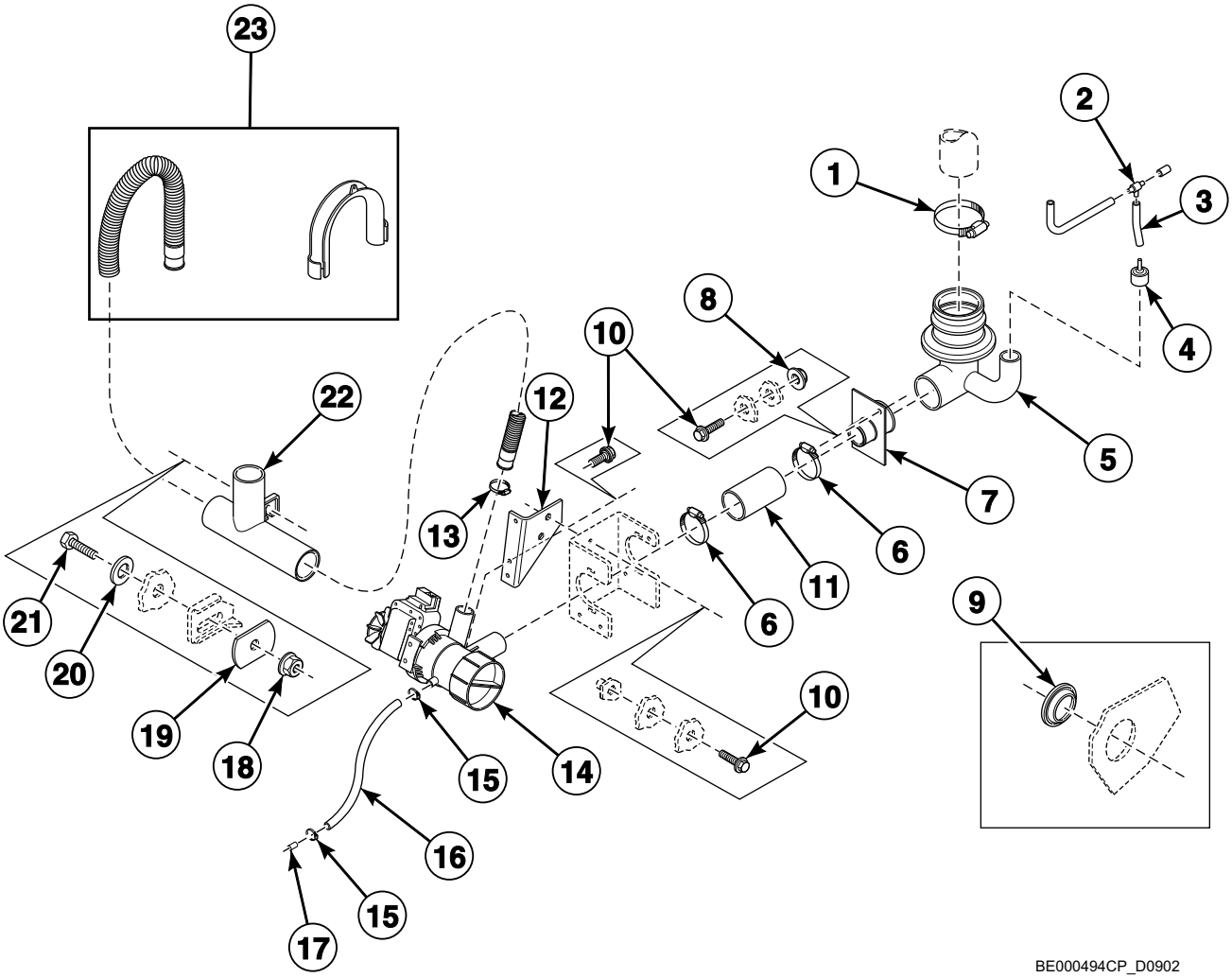

© Copyright, Alliance Laundry Systems LLC – DO NOT COPY or TRANSMIT

Drain Plumbing - Models with Pump Drain Through 1/26/05

REF	PART NO.	DESCRIPTION	COMMENTS
1	223/00014/00	Hose Clamp	
2	223/00173/10	Pressure Switch Hose Tee	
3	223/00333/00	Pressure Hose	
4	223/00035/02	Pressure Switch Cap	
5	255/00010/01	Tub to Drain Valve Hose	
6	223/00012/00	Hose Clamp	
7	155/00155/00	Drain Piece	
8	206/00105/00	Nut	
9	255/00019/00	Stopper	
10	206/00099/00	Bolt	
11	255/00017/00	Connecting Piece	
12	155/00159/00	Pump Support	
13	223/00011/00	Hose Clamp	
14	209/00560/00	Hanging Drain Pump	
15	223/00009/00	Clamp	
16	223/00159/00	Pipe	
17	223/00162/00	Stopper	
18	209/00101/00	Nut	
19	101/00007/00	Outlet Pipe Plate Assembly	
20	201/00007/00	Washer	
21	206/00033/00	Bolt	
22	223/00146/00	Drain Piece	
23	899P3	Drain Pipe Kit	

© Copyright, Alliance Laundry Systems LLC – DO NOT COPY or TRANSMIT

Drain Plumbing - Models with Pump Drain Starting 1/27/05

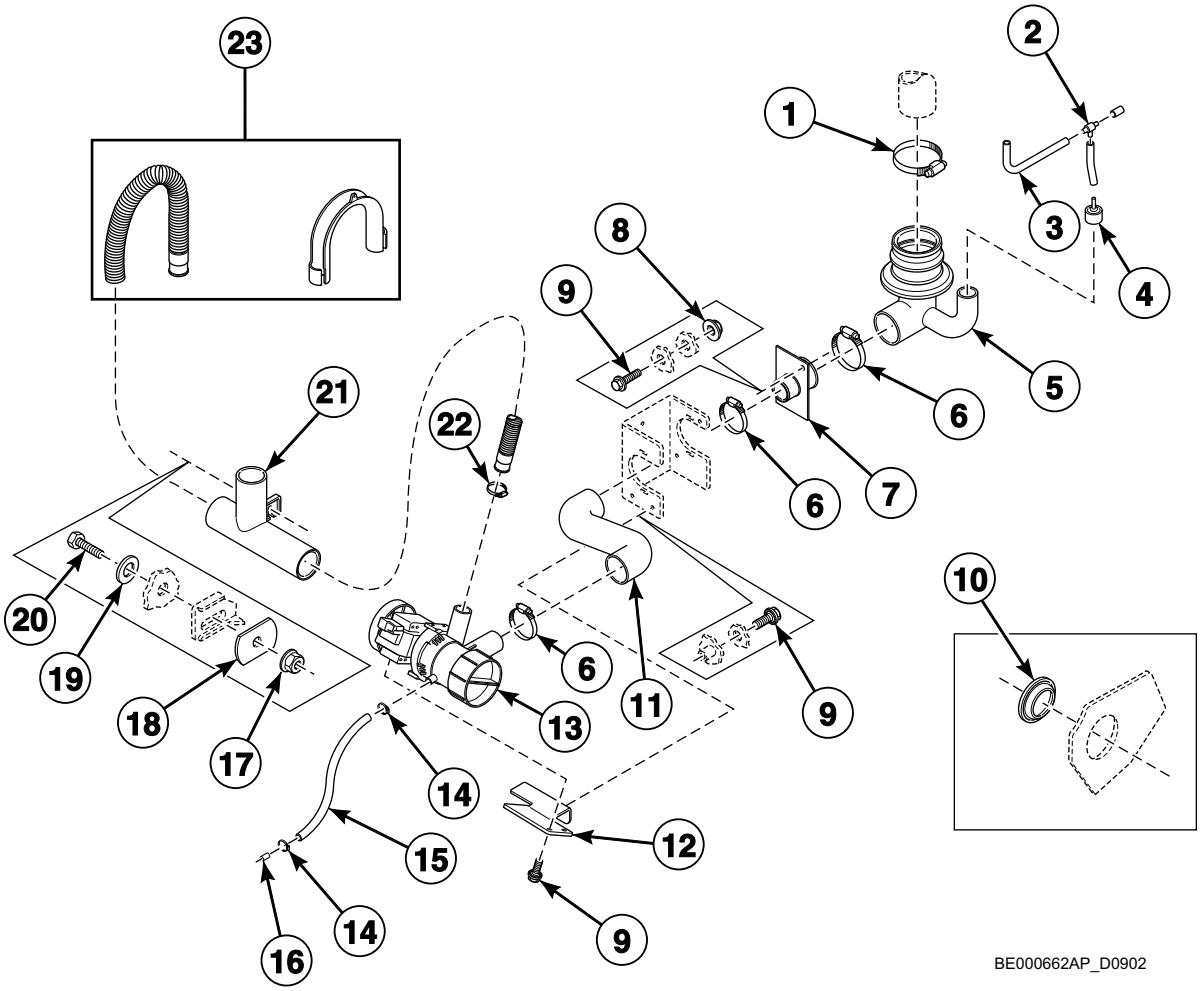

© Copyright, Alliance Laundry Systems LLC – DO NOT COPY or TRANSMIT

Drain Plumbing - Models with Pump Drain Starting 1/27/05

REF	PART NO.	DESCRIPTION	COMMENTS
1	223/00014/00	Hose Clamp	
2	223/00173/10	Pressure Switch Hose Tee	
3	223/00333/00	Pressure Hose	
4	223/00035/02	Pressure Switch Cap	
5	255/00010/00	Tub to Drain Valve Hose	
6	223/00012/00	Hose Clamp	
7	155/00155/00	Drain Piece	
8	206/00105/00	Nut	
9	206/00099/00	Bolt	
10	255/00019/00	Stopper	
11	223/00307/00	Drain Hose	
12	111/00288/10	Pump Support	
13	209/00646/00	Pump	50 Hertz
	209/00647/00	Pump	60 Hertz
14	223/00009/00	Clamp	
15	223/00159/00	Pipe	
16	223/00162/00	Stopper	
17	206/00101/00	Nut	
18	101/00007/00	Outlet Pipe Plate Assembly	
19	201/00007/00	Washer	
20	206/00033/00	Bolt	
21	223/00146/00	Drain Piece	
22	223/00011/00	Hose Clamp	
23	899P3	Drain Pipe Kit	

© Copyright, Alliance Laundry Systems LLC – DO NOT COPY or TRANSMIT

Door Lock

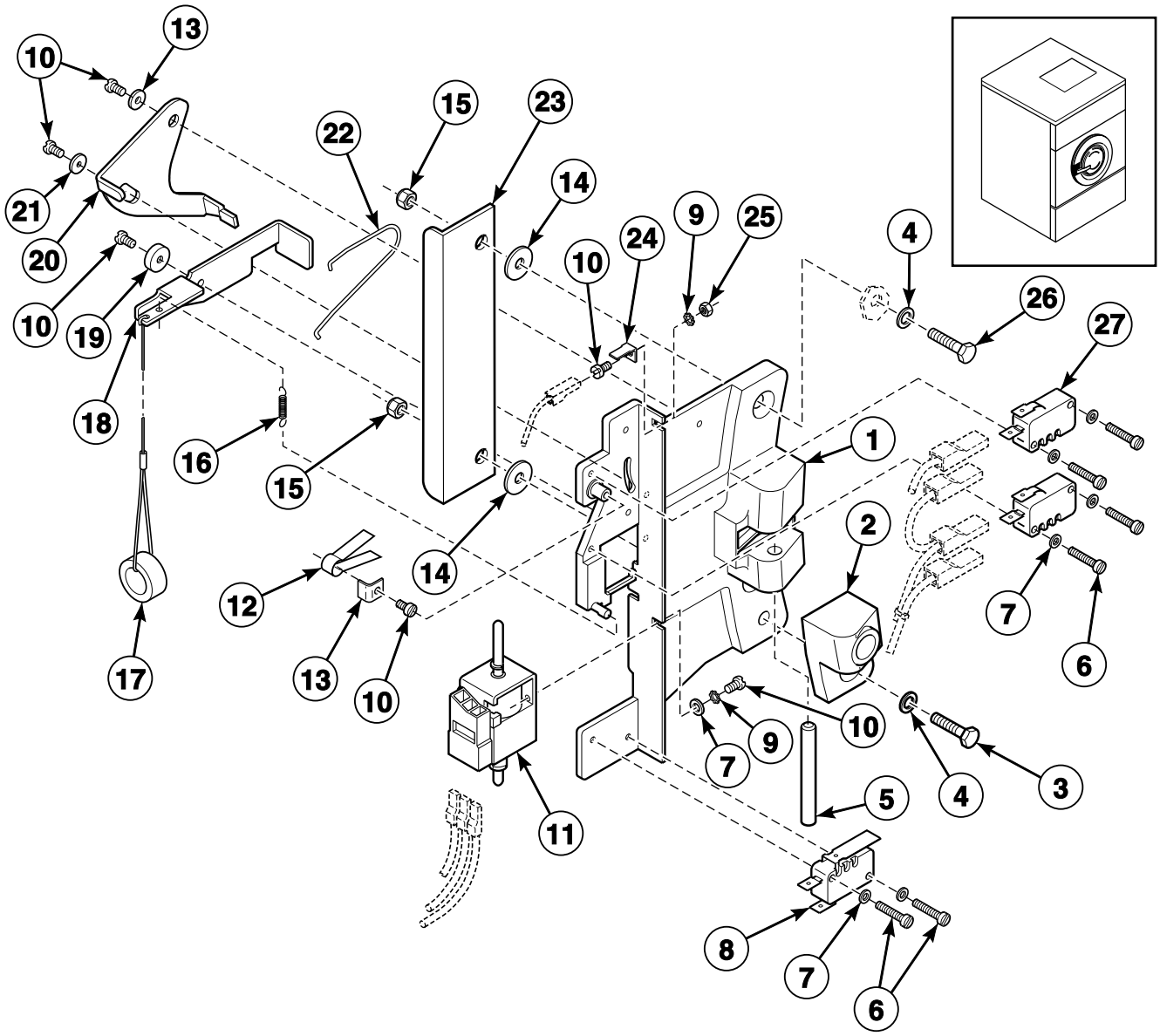

BE000112BP_D0902

© Copyright, Alliance Laundry Systems LLC – DO NOT COPY or TRANSMIT

Door Lock

REF	PART NO.	DESCRIPTION	COMMENTS
1	217/00052/01A	Door Lock Assembly	
	217/00052/00A	Door Lock Assembly	
2	217/00052/11	Door Lock Bracket	
3	205/00115/00	Bolt	
4	202/00101/00	Washer	
5	217/00017/03	Lock Shaft	
6	207/00009/00	Screw	
7	201/00018/00	Washer	
8	209/00273/00	Light Microswitch	
9	203/00007/00	Washer	
10	207/00135/00	Screw	
11	B12495102	Door Solenoid Assembly	
12	224/00049/00	Door Lock Spring	
13	201/00017/00	Washer	
14	201/00006/00	Washer	
15	204/00009/00	Nut	
16	224/00043/00	Interlock Coil Spring	
17	224/00015/00	Door Latch Cord	
18	217/00052/04	Interlock Lever	
19	217/00052/03	Door Lock Spacer	
20	217/00052/05	Switch Lever	
21	202/00124/00	Washer	
22	224/00040/00	Lever Spring	
23	117/00052/08	Lock Protection Plate	
24	210/10015/00	Ground Terminal	
25	204/00008/00	Nut	
26	205/00103/00	Bolt	
27	209/00272/00	Door Lock Microswitch	

© Copyright, Alliance Laundry Systems LLC – DO NOT COPY or TRANSMIT

Door

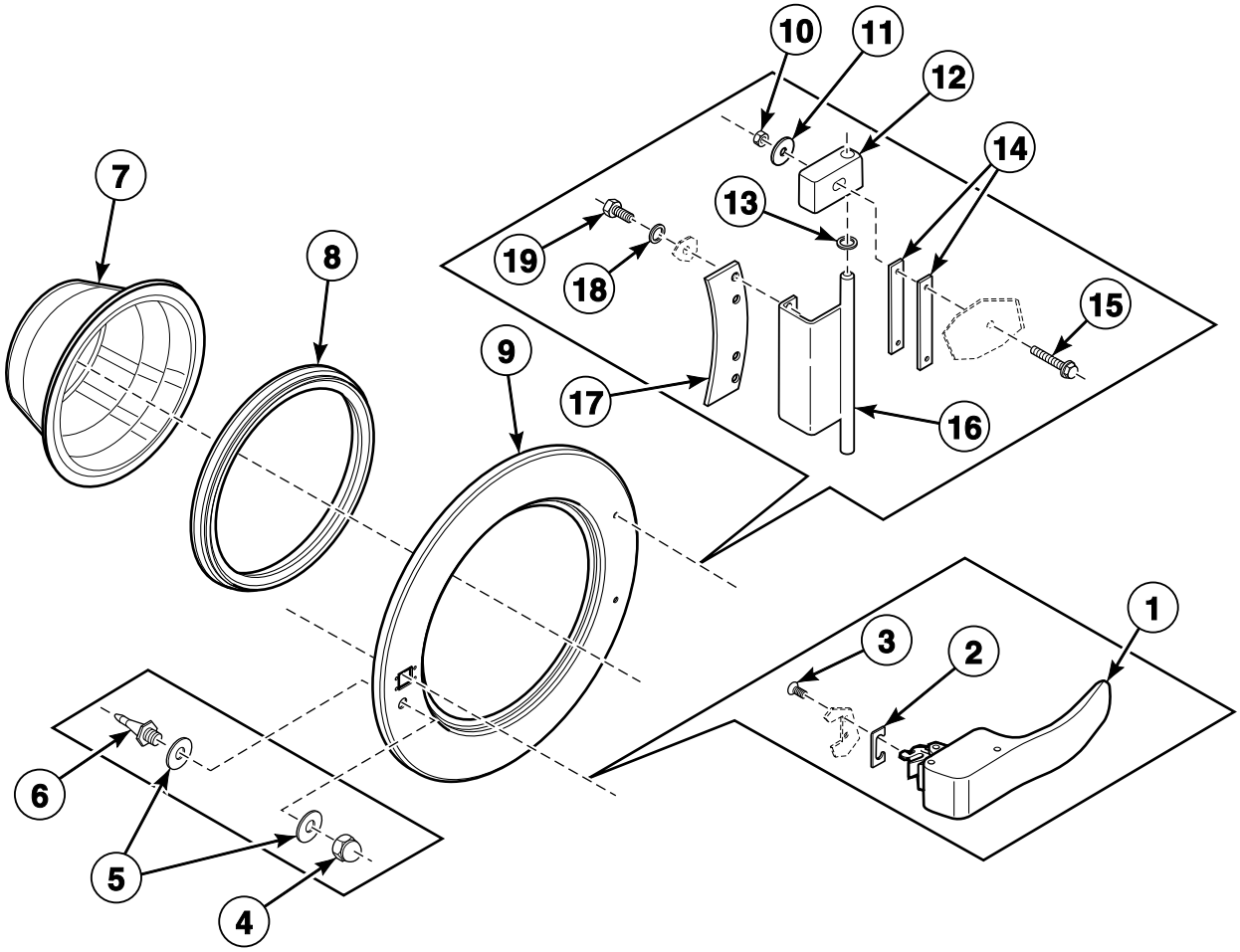

BE000033DP_D0902

© Copyright, Alliance Laundry Systems LLC – DO NOT COPY or TRANSMIT

Door

REF	PART NO.	DESCRIPTION	COMMENTS
1	217/00059/00	Door Handle	HC and IHC models; Black
	217/00065/00	Door Handle	CHC and HC models; Gray
2	217/00016/00	Door Handle Stop	
3	B12500801	Screw	
4	204/00103/00	Nut	
5	202/00111/00	Washer	
6	211/00109/02	Door Lock Pin Kit	
7	217/00023/00	Door Glass	
8	217/00015/00	Door Glass Seal	
9	118/00046/10	Door Frame	
10	204/00106/00	Nut	
11	202/00108/00	Washer	
12	217/00009/02	Door Hinge Assembly	
13	202/00104/00	Washer	
14	117/00010/00	Door Hinge Spacer	
15	207/00126/00	Screw	M6 x 35
	207/00125/00	Bolt	M6 x 25
16	221/00005/00	Door Hinge	
17	118/00065/00	Door Hinge Plate Assembly	
18	202/00101/00	Washer	
19	205/00107/00	Bolt	

© Copyright, Alliance Laundry Systems LLC – DO NOT COPY or TRANSMIT

Control Panel - Cygnus Professional

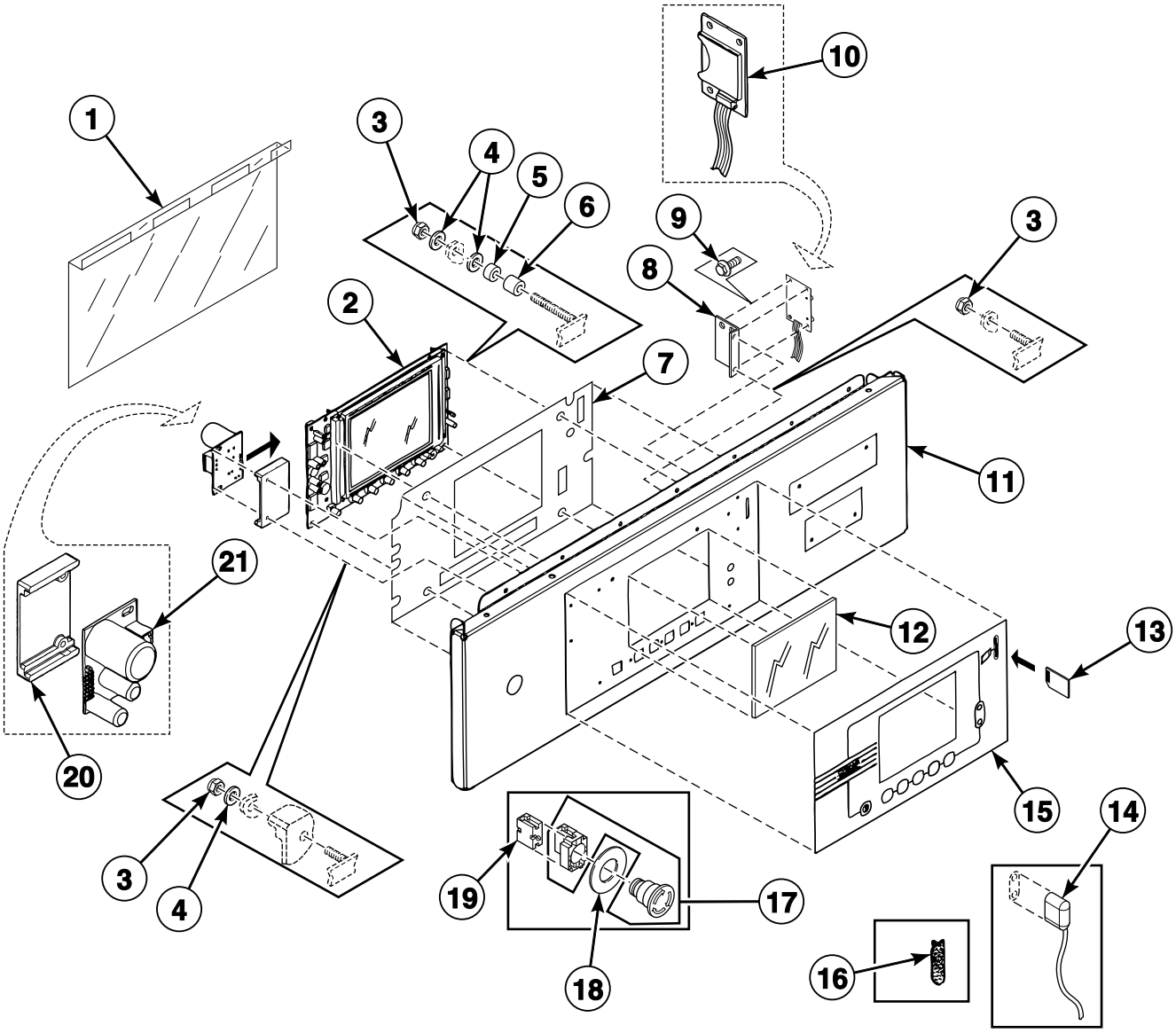

BE000804CP_D0902

© Copyright, Alliance Laundry Systems LLC – DO NOT COPY or TRANSMIT

Control Panel - Cygnus Professional

REF	PART NO.	DESCRIPTION	COMMENTS
1	229/00289/00	Circuit Board Cover	
2	209/02002/00	Display PC-Board	
3	204/00116/00	Nut	
4	223/00123/00	Washer	
5	211/00128/00	Printboard Separator	
6	211/00122/00	Standoff	
7	229/00268/00	Insulating Sticker	
8	111/01893/00	Printboard Support Card	
9	211/00145/00	Standoff	
10	B12305201	Memory Card PC-Board	Models prior to 4/5/11 require a firmware upgrade
	B12538301	Data Card Ribbon Assembly	
11	111/01845/00	Upper Front Panel	
12	225/00321/00	Plexi Frame	
13	209/02022/00	Datacard	
14	210/00902/00	Infrared Cable	
15	225/10313/00	Operating Sticker	Without DataFlash card opening
	225/10426/00	Operating Sticker	With DataFlash card opening
16	223/00348/00	Datacard Cover	
17	209/00099/20	Emergency Switch Pushbutton	
18	209/00520/00	Telem Sticker	
19	209/00099/26	Contact Switch	
20	223/00374/00	Mounting Plate	
21	209/02010/00	Door Lock PC-Board	

© Copyright, Alliance Laundry Systems LLC – DO NOT COPY or TRANSMIT

Control Panel - Cygnus Premium OPL

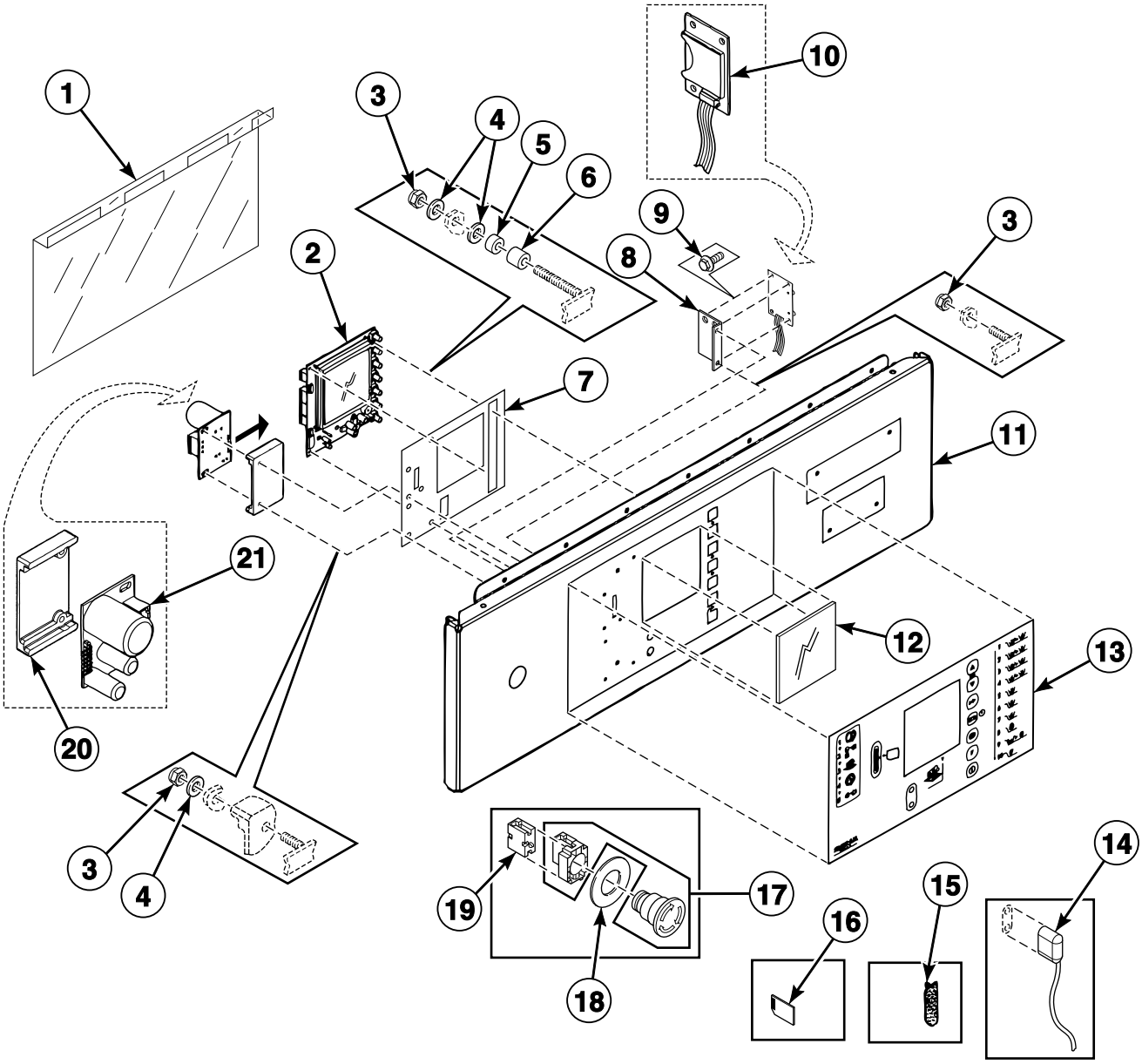

BE000871AP_D0902

© Copyright, Alliance Laundry Systems LLC – DO NOT COPY or TRANSMIT

Control Panel - Cygnus Premium OPL

REF	PART NO.	DESCRIPTION	COMMENTS
1	229/00289/00	Circuit Board Cover	
2	209/02015/02	Printboard	
3	204/00116/00	Nut	
4	223/00123/00	Washer	
5	211/00128/00	Printboard Separator	
6	211/00122/00	Standoff	
7	229/00291/00	Insulating Sticker	
8	111/01893/00	Printboard Support Card	
9	211/00145/00	Standoff	
10	B12305201	Memory Card PC-Board	Models prior to 4/5/11 require a firmware upgrade
	B12538301	Data Card Ribbon Assembly	
11	111/01900/00	Operating Panel	
12	225/00323/00	Plexi Frame	
13	225/10404/00	Operating Sticker	With DataFlash card opening
	225/10427/00	Operating Sticker	Without DataFlash card opening
14	210/00902/00	Infrared Cable	
15	223/00348/00	Datacard Cover	
16	209/02022/00	Datacard	
17	209/00099/20	Emergency Switch Pushbutton	
18	209/00520/00	Telem Sticker	
19	209/00099/26	Contact Switch	
20	223/00374/00	Mounting Plate	
21	209/02010/00	Door Lock PC-Board	

© Copyright, Alliance Laundry Systems LLC – DO NOT COPY or TRANSMIT

Control Panel - Cygnus Premium OPL with Frontal Supply Dispenser

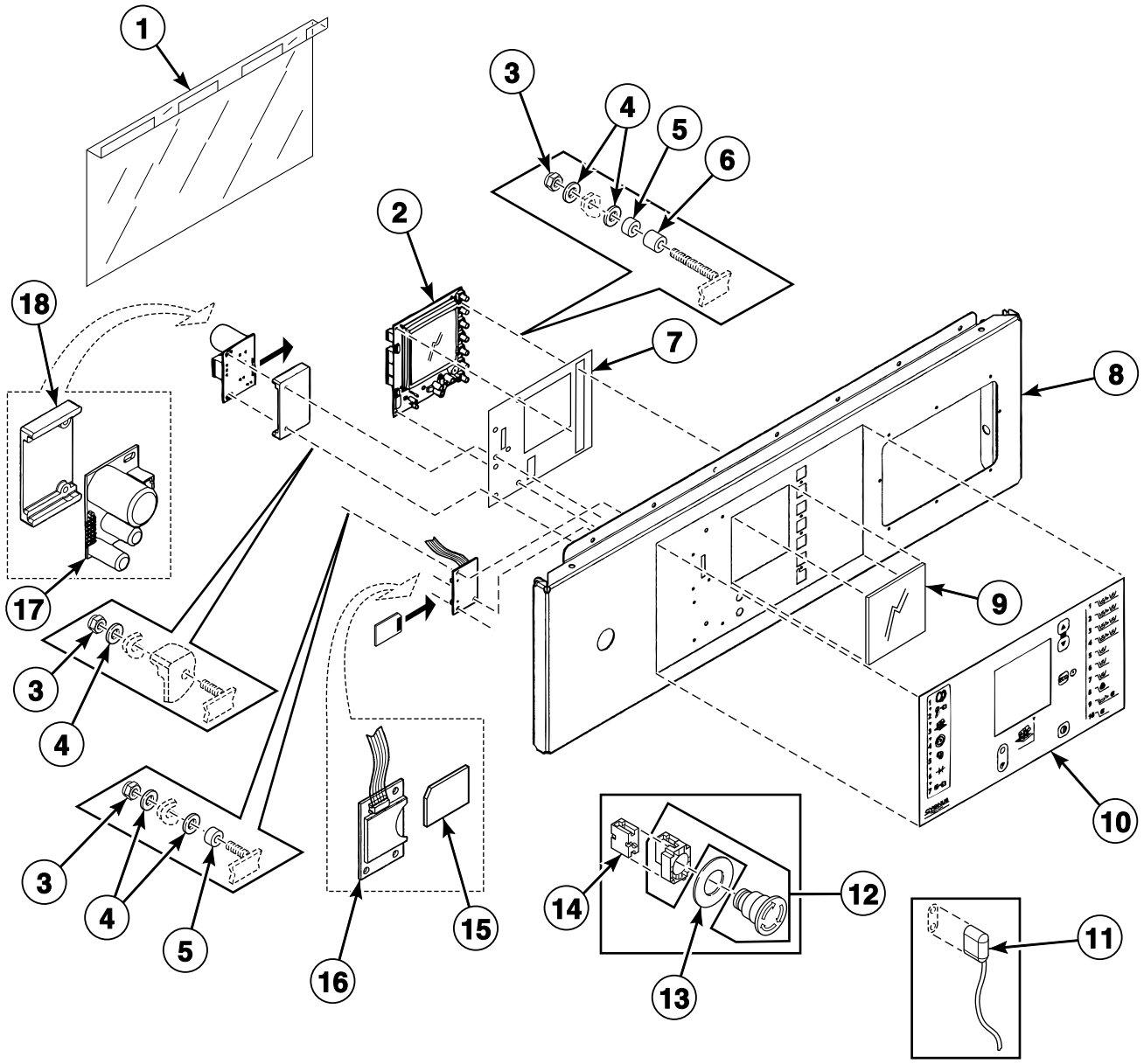

BE000870AP_D0902

© Copyright, Alliance Laundry Systems LLC – DO NOT COPY or TRANSMIT

Control Panel - Cygnus Premium OPL with Frontal Supply Dispenser

REF	PART NO.	DESCRIPTION	COMMENTS
1	229/00289/00	Circuit Board Cover	
2	209/02015/02	Printboard	
3	204/00116/00	Nut	
4	223/00123/00	Washer	
5	211/00128/00	Printboard Separator	
6	211/00122/00	Standoff	
7	229/00291/00	Insulating Sticker	
8	111/01904/00	Operating Panel	
9	225/00323/00	Plexi Frame	
10	225/10404/00	Operating Sticker	With DataFlash card opening
	225/10427/00	Operating Sticker	Without DataFlash card opening
11	210/00902/00	Infrared Cable	
12	209/00099/20	Emergency Switch Pushbutton	
13	209/00520/00	Telem Sticker	
14	209/00099/26	Contact Switch	
15	209/02022/00	Datacard	
16	B12305201	Memory Card PC-Board	Models prior to 4/5/11 requires a firmware upgrade
	B12538301	Data Card Ribbon Assembly	
17	209/02010/00	Door Lock PC-Board	
18	223/00374/00	Mounting Plate	

© Copyright, Alliance Laundry Systems LLC – DO NOT COPY or TRANSMIT

Control Panel - Cygnus Premium Coin

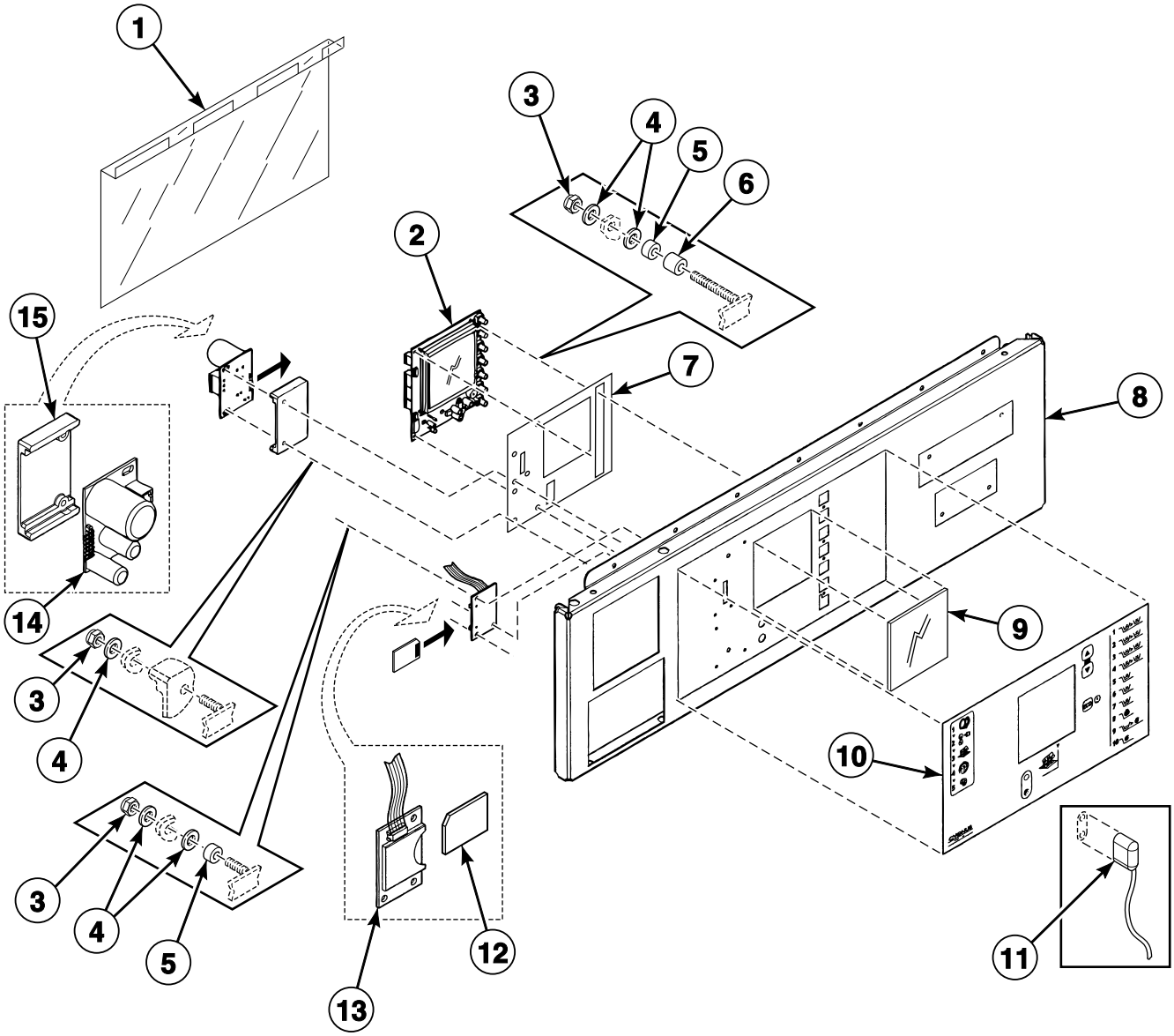

BE000872AP_D0902

© Copyright, Alliance Laundry Systems LLC – DO NOT COPY or TRANSMIT

Control Panel - Cygnus Premium Coin

REF	PART NO.	DESCRIPTION	COMMENTS
1	229/00289/00	Circuit Board Cover	
2	209/02015/02	Printboard	
3	204/00116/00	Nut	
4	223/00123/00	Washer	
5	211/00128/00	Printboard Separator	
6	211/00122/00	Standoff	
7	229/00291/00	Insulating Sticker	
8	111/01901/00	Operating Panel	
9	225/00323/00	Plexi Frame	
10	225/10403/00	Operating Sticker	
11	210/00902/00	Infrared Cable	
12	209/02022/00	Datacard	
13	B12305201	Memory Card PC-Board	Models prior to 4/5/11 require a firmware upgrade
	B12538301	Data Card Ribbon Assembly	
14	209/02010/00	Door Lock PC-Board	
15	223/00374/00	Mounting Plate	

© Copyright, Alliance Laundry Systems LLC – DO NOT COPY or TRANSMIT

Control Panel - Cygnus Premium Coin with Frontal Supply Dispenser

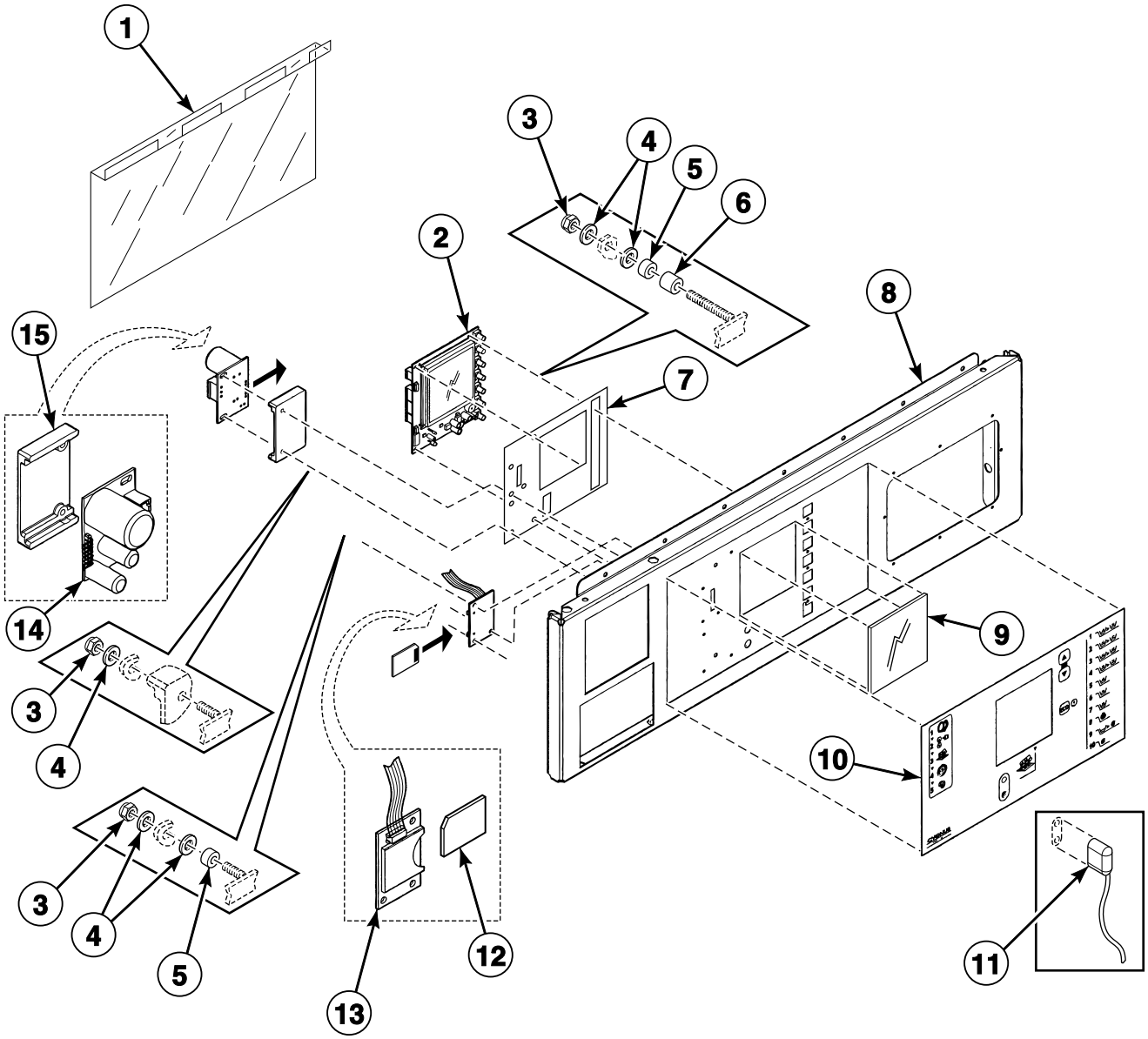

BE000873AP_D0902

© Copyright, Alliance Laundry Systems LLC – DO NOT COPY or TRANSMIT

Control Panel - Cygnus Premium Coin with Frontal Supply Dispenser

REF	PART NO.	DESCRIPTION	COMMENTS
1	229/00289/00	Circuit Board Cover	
2	209/02015/02	Printboard	
3	204/00116/00	Nut	
4	223/00123/00	Washer	
5	211/00128/00	Printboard Separator	
6	211/00122/00	Standoff	
7	229/00291/00	Insulating Sticker	
8	111/01905/00	Operating Panel	
9	225/00323/00	Plexi Frame	
10	225/10403/00	Operating Sticker	
11	210/00902/00	Infrared Cable	
12	209/02022/00	Datacard	
13	B12305201	Memory Card PC-Board	Models prior to 4/5/11 require a firmware upgrade
	B12538301	Data Card Ribbon Assembly	
14	209/02010/00	Door Lock PC-Board	
15	223/00374/00	Mounting Plate	

© Copyright, Alliance Laundry Systems LLC – DO NOT COPY or TRANSMIT

Control Panel - Cygnus Standard/Commercial OPL

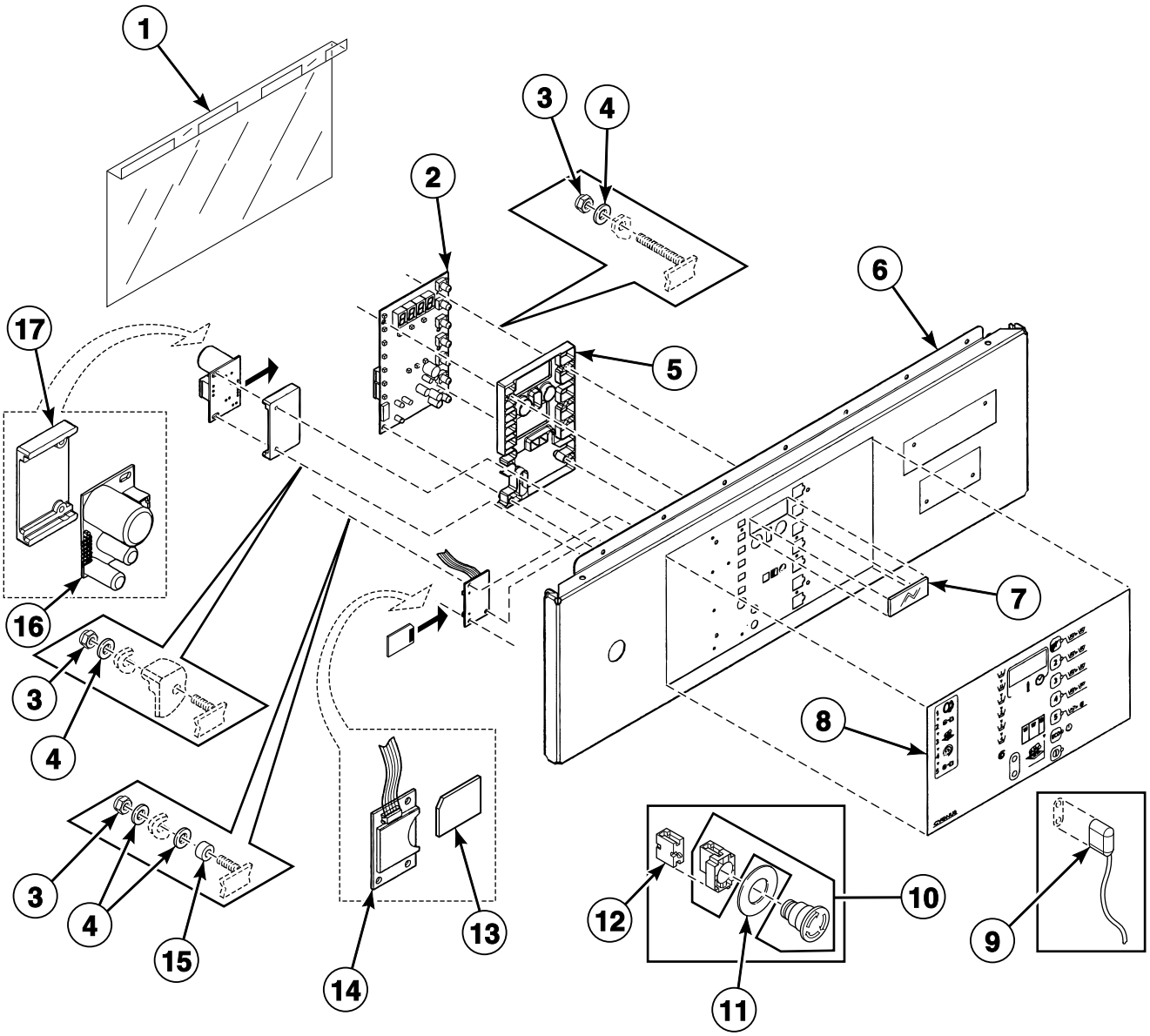

BE000867AP_D0902

© Copyright, Alliance Laundry Systems LLC – DO NOT COPY or TRANSMIT

Control Panel - Cygnus Standard/Commercial OPL

REF	PART NO.	DESCRIPTION	COMMENTS
1	229/00289/00	Circuit Board Cover	
2	209/02001/02	Printboard	
3	204/00116/00	Nut	
4	223/00123/00	Washer	
5	223/00330/00	Protection LED	
6	111/01817/00	Operating Panel	
7	225/00322/00	Plexi Frame	
8	225/10307/00	Operating Sticker	Models HC60_CYGNUS-STANDARD_OPL, HC65_CYGNUS-STANDARD_OPL, HC75_CYGNUS-STANDARD_OPL and HC100_CYGNUS-STANDARD_OPL
	225/10308/00	Operating Sticker	Models HC60_CYGNUS-COMM_OPL, HC65_CYGNUS-COMM_OPL, HC75_CYGNUS-COMM_OPL and HC100_CYGNUS-COMM_OPL
9	210/00902/00	Infrared Cable	
10	209/00248/20	Mushroom Pushbutton	
11	209/00520/00	Telem Sticker	
12	209/00099/26	Contact Switch	
13	209/02022/00	Datacard	
14	B12305201	Memory Card PC-Board	Models prior to 4/5/11 require a firmware upgrade
	B12538301	Data Card Ribbon Assembly	
15	211/00128/00	Printboard Separator	
16	209/02010/00	Door Lock PC-Board	
17	223/00374/00	Mounting Plate	

© Copyright, Alliance Laundry Systems LLC – DO NOT COPY or TRANSMIT

Control Panel - Cygnus Standard/Commercial OPL with Frontal Supply Dispenser

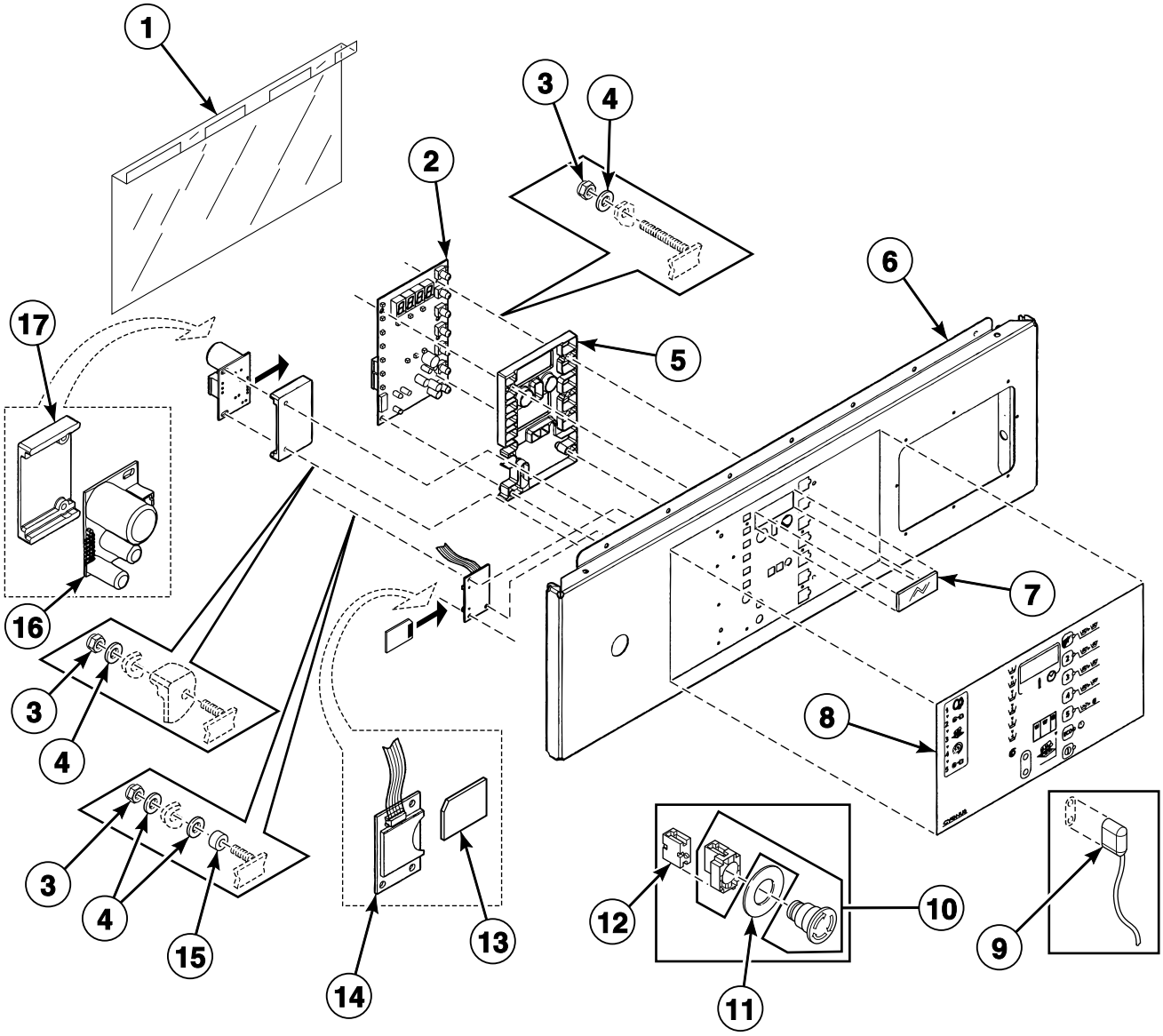

BE000868AP_D0902

© Copyright, Alliance Laundry Systems LLC – DO NOT COPY or TRANSMIT

Control Panel - Cygnus Standard/Commercial OPL with Frontal Supply Dispenser

REF	PART NO.	DESCRIPTION	COMMENTS
1	229/00289/00	Circuit Board Cover	
2	209/02001/02	Printboard	
3	204/00116/00	Nut	
4	223/00123/00	Washer	
5	223/00330/00	Protection LED	
6	111/01827/00	Operating Panel	
7	225/00322/00	Plexi Frame	
8	225/10307/00	Operating Sticker	Models HC60_CYGNUS-STANDARD_OPL, HC65_CYGNUS-STANDARD_OPL, HC75_CYGNUS-STANDARD_OPL and HC100_CYGNUS-STANDARD_OPL
	225/10308/00	Operating Sticker	Models HC60_CYGNUS-COMM_OPL, HC65_CYGNUS-COMM_OPL, HC75_CYGNUS-COMM_OPL and HC100_CYGNUS-COMM_OPL
9	210/00902/00	Infrared Cable	
10	209/00248/20	Mushroom Pushbutton	
11	209/00520/00	Telem Sticker	
12	209/00099/26	Contact Switch	
13	209/02022/00	Datacard	
14	B12305201	Memory Card PC-Board	Models prior to 4/5/11 require a firmware upgrade
	B12538301	Data Card Ribbon Assembly	
15	211/00128/00	Printboard Separator	
16	209/02010/00	Door Lock PC-Board	
17	223/00374/00	Mounting Plate	

© Copyright, Alliance Laundry Systems LLC – DO NOT COPY or TRANSMIT

Control Panel - Cygnus Standard/Commercial Coin

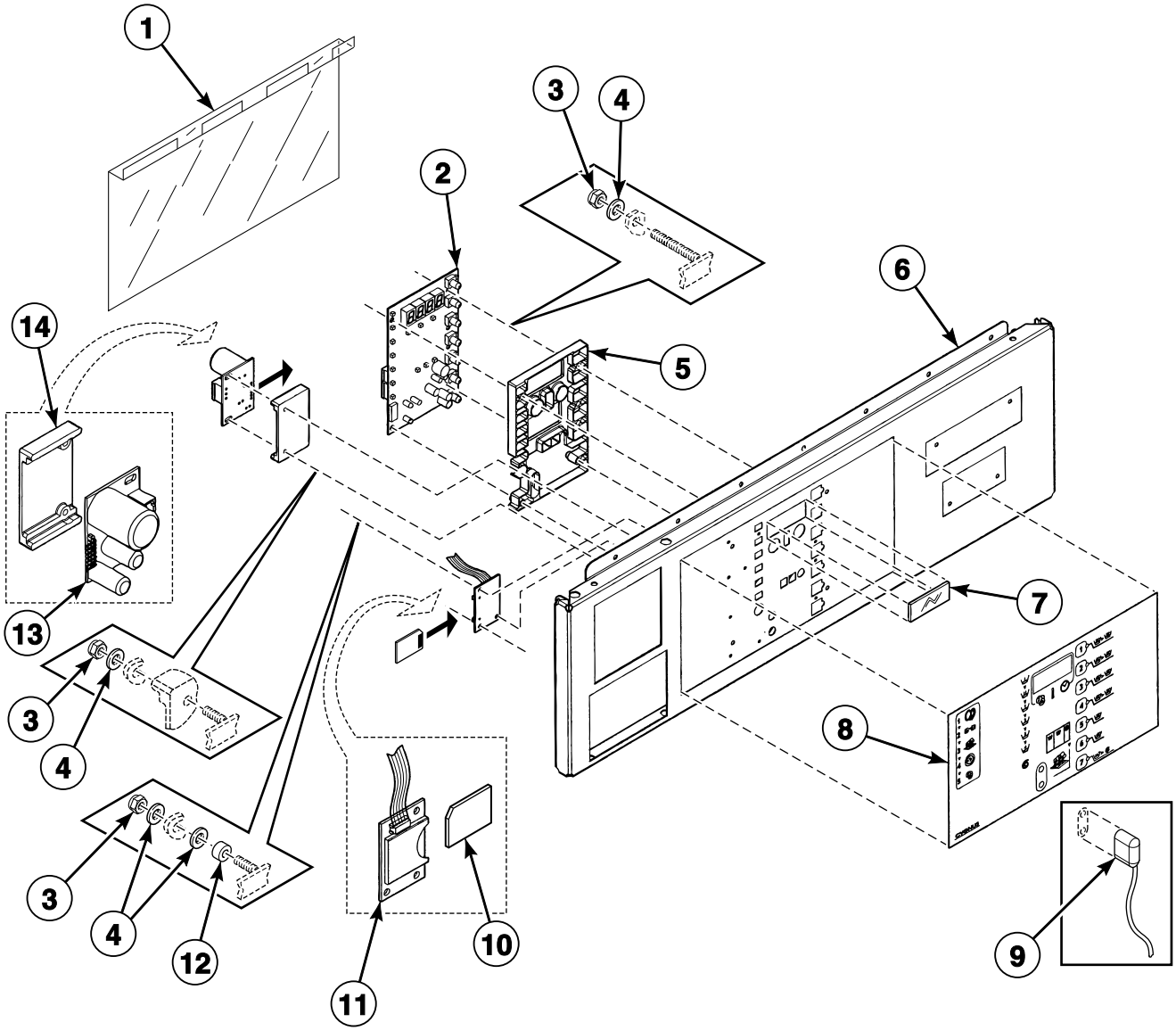

BE000874AP_D0902

© Copyright, Alliance Laundry Systems LLC – DO NOT COPY or TRANSMIT

Control Panel - Cygnus Standard/Commercial Coin

REF	PART NO.	DESCRIPTION	COMMENTS
1	229/00289/00	Circuit Board Cover	
2	209/02001/02	Printboard	
3	204/00116/00	Nut	
4	223/00123/00	Washer	
5	223/00330/00	Protection LED	
6	111/01818/00	Operating Panel	
7	225/00322/00	Plexi Frame	
8	225/10305/00	Operating Sticker	Models HC60_CYGNUS-STANDARD_COIN, HC65_CYGNUS-STANDARD_COIN, HC75_CYGNUS-STANDARD_COIN and HC100_CYGNUS-STANDARD_COIN
	225/10306/00	Operating Sticker	Models HC60_CYGNUS-COMM_COIN, HC65_CYGNUS-COMM_COIN, HC75_CYGNUS-COMM_COIN and HC100_CYGNUS-COMM_COIN
9	210/00902/00	Infrared Cable	
10	209/02022/00	Datacard	
11	B12305201	Memory Card PC-Board	Models prior to 4/5/11 require a firmware upgrade
	B12538301	Data Card Ribbon Assembly	
12	211/00128/00	Printboard Separator	
13	209/02010/00	Door Lock PC-Board	
14	223/00374/00	Mounting Plate	

© Copyright, Alliance Laundry Systems LLC – DO NOT COPY or TRANSMIT

Control Panel - Cygnus Standard/Commercial Coin with Frontal Supply Dispenser

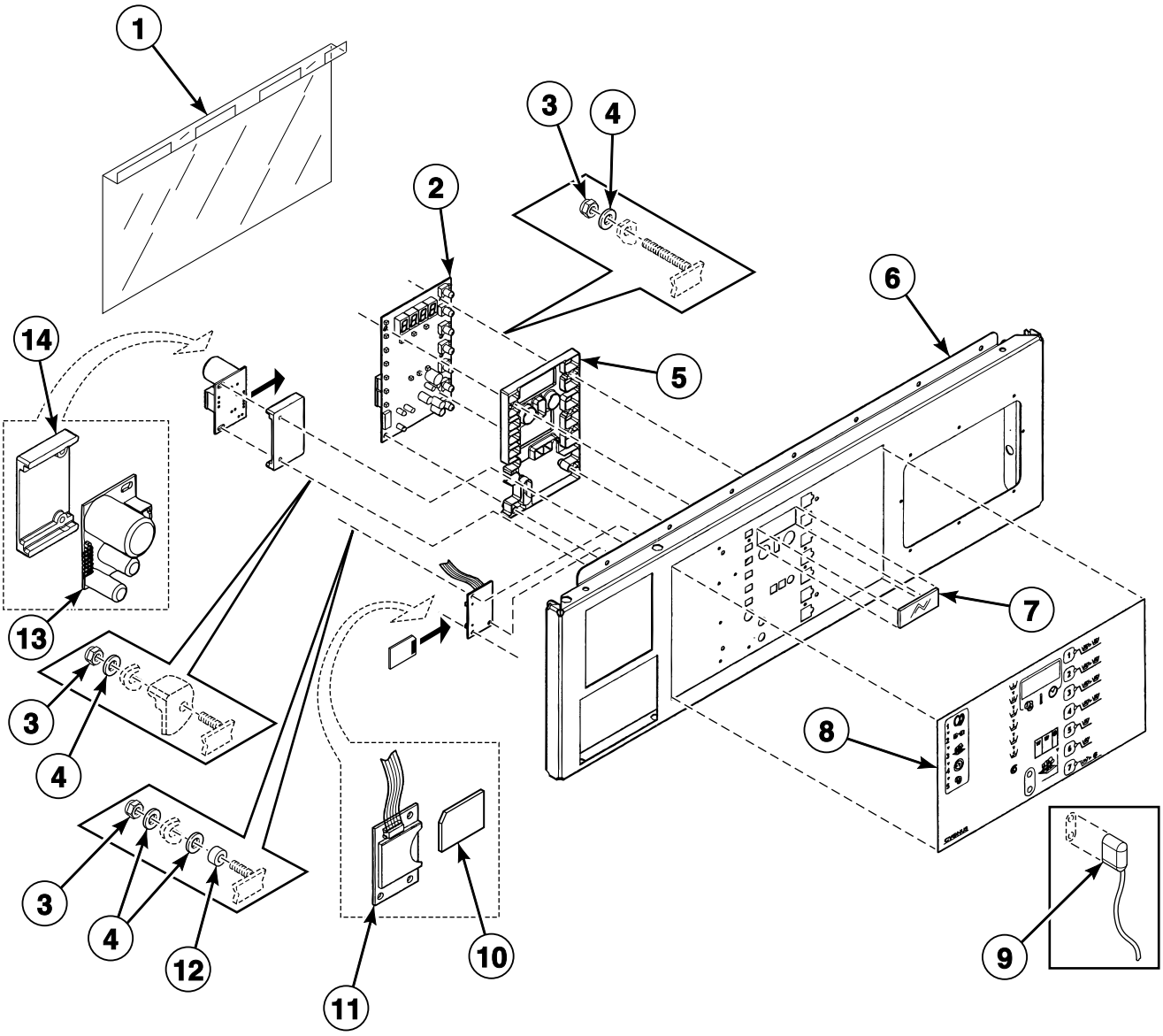

BE000869AP_D0902

© Copyright, Alliance Laundry Systems LLC – DO NOT COPY or TRANSMIT

Control Panel - Cygnus Standard/Commercial Coin with Frontal Supply Dispenser

REF	PART NO.	DESCRIPTION	COMMENTS
1	229/00289/00	Circuit Board Cover	
2	209/02001/02	Printboard	
3	204/00116/00	Nut	
4	223/00123/00	Washer	
5	223/00330/00	Protection LED	
6	111/01826/00	Operating Panel	
7	225/00322/00	Plexi Frame	
8	225/10305/00	Operating Sticker	Models HC60_CYGNUS-STANDARD_COIN, HC65_CYGNUS-STANDARD_COIN, HC75_CYGNUS-STANDARD_COIN and HC100_CYGNUS-STANDARD_COIN
	225/10306/00	Operating Sticker	Models HC60_CYGNUS-COMM_COIN, HC65_CYGNUS-COMM_COIN, HC75_CYGNUS-COMM_COIN and HC100_CYGNUS-COMM_COIN
9	210/00902/00	Infrared Cable	
10	209/02022/00	Datacard	
11	B12305201	Memory Card PC-Board	Models prior to 4/5/11 require a firmware upgrade
	B12538301	Data Card Ribbon Assembly	
12	211/00128/00	Printboard Separator	
13	209/02010/00	Door Lock PC-Board	
14	223/00374/00	Mounting Plate	

© Copyright, Alliance Laundry Systems LLC – DO NOT COPY or TRANSMIT

Control Panel - Micro-20 OPL

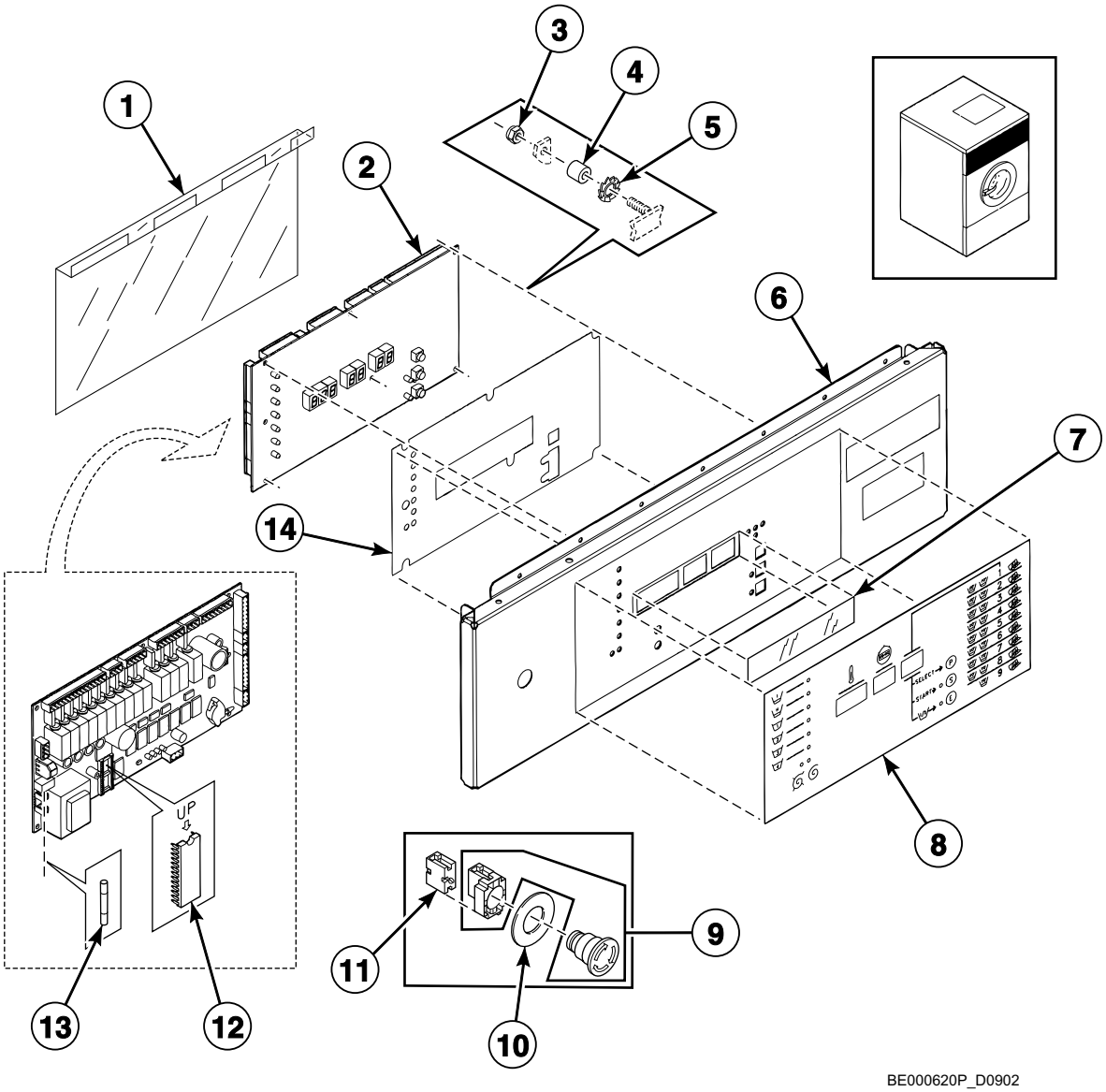

© Copyright, Alliance Laundry Systems LLC – DO NOT COPY or TRANSMIT

Control Panel - Micro-20 OPL

REF	PART NO.	DESCRIPTION	COMMENTS
1	229/00289/00	Circuit Board Cover	
2	209/00440/70	Printboard	220 Volt
	209/00440/80	Printboard	115 Volt
3	204/00116/00	Nut	
4	211/00122/00	Standoff	
5	203/00006/00	Washer	
6	111/01814/00	Upper Front Panel	
7	225/00316/00	Plexi Frame	
8	225/00407/00	Keypad Sticker	With ECO
	225/00408/00	Operating Sticker	Without ECO
9	209/00248/20	Mushroom Pushbutton	
10	209/00520/00	Telem Sticker	
11	209/00099/26	Contact Switch	
12	209/00266/01	Eprom	Standard software
13	209/00372/01	Fuse	125 mA
14	229/00255/00	Insulating Sticker	

© Copyright, Alliance Laundry Systems LLC – DO NOT COPY or TRANSMIT

Control Panel - Micro-20 OPL with Frontal Supply Dispenser

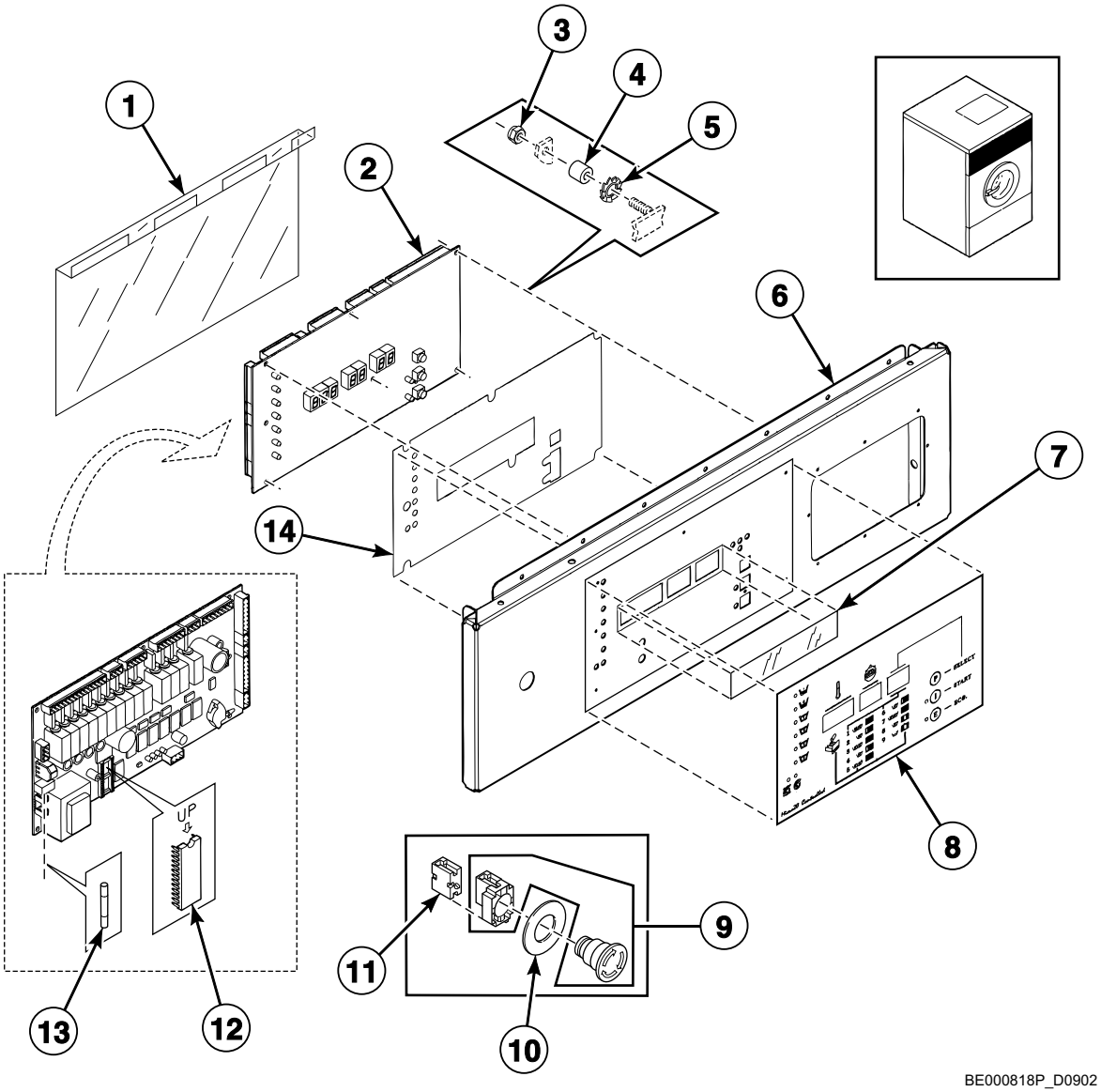

BE000818P_D0902

© Copyright, Alliance Laundry Systems LLC – DO NOT COPY or TRANSMIT

Control Panel - Micro-20 OPL with Frontal Supply Dispenser

REF	PART NO.	DESCRIPTION	COMMENTS
1	229/00289/00	Circuit Board Cover	
2	209/00440/70	Printboard	220 Volt
	209/00440/80	Printboard	115 Volt
3	204/00116/00	Nut	
4	211/00122/00	Standoff	
5	203/00006/00	Washer	
6	111/01813/00	Upper Front Panel	
7	225/00316/00	Plexi Frame	
8	225/00409/00	Operating Sticker	
9	209/00248/20	Mushroom Pushbutton	
10	209/00520/00	Telem Sticker	
11	209/00099/26	Contact Switch	
12	209/00266/01	Eprom	Standard software
13	209/00372/01	Fuse	125 mA
14	229/00255/00	Insulating Sticker	

© Copyright, Alliance Laundry Systems LLC – DO NOT COPY or TRANSMIT

Control Panel - Sigma OPL

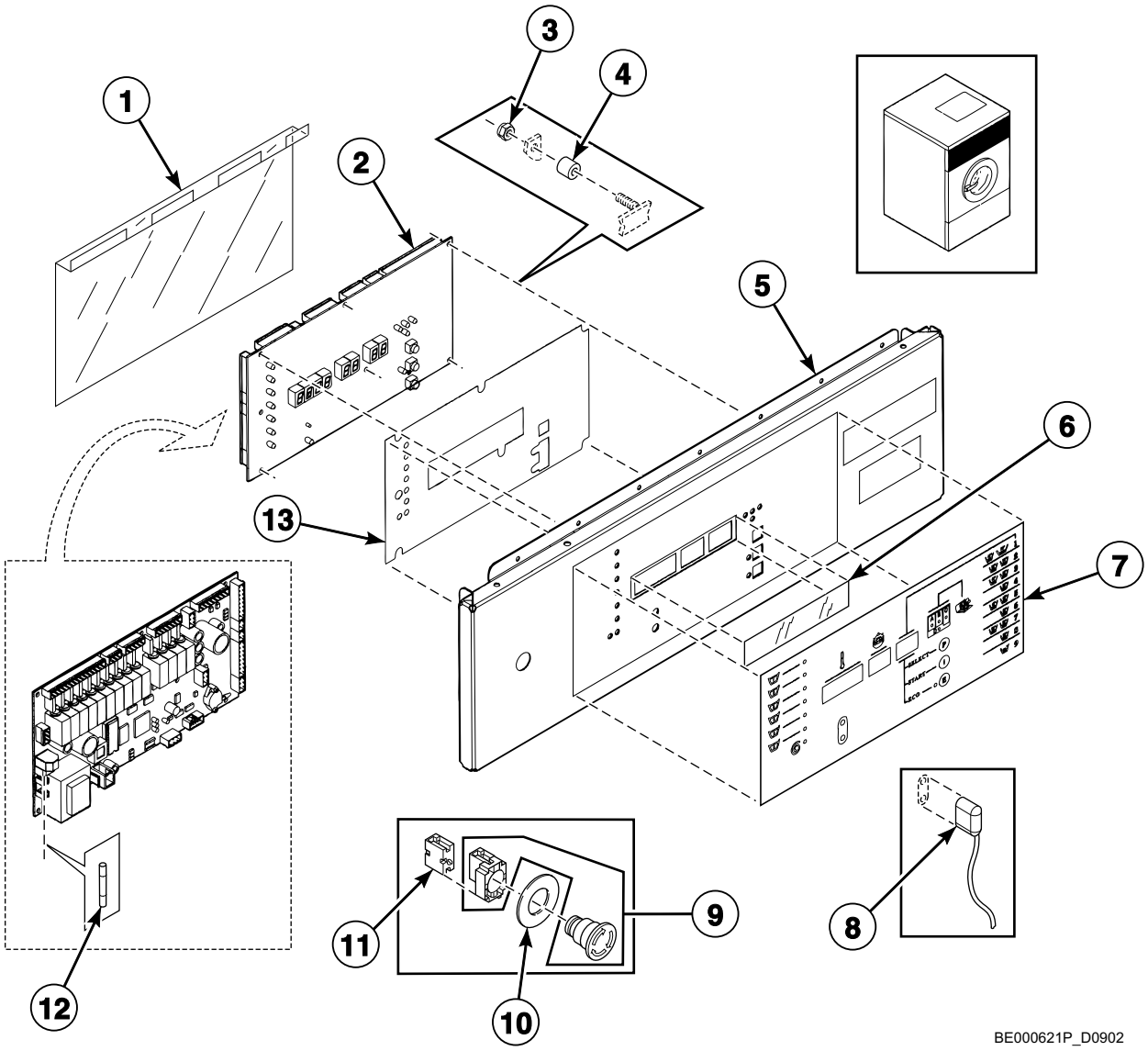

© Copyright, Alliance Laundry Systems LLC – DO NOT COPY or TRANSMIT

Control Panel - Sigma OPL

REF	PART NO.	DESCRIPTION	COMMENTS
1	229/00262/00	Circuit Board Cover	
2	209/00547/00	Control Board	
3	204/00114/00	Nut	
4	211/00122/00	Standoff	
5	111/01814/00	Upper Front Panel	
6	225/00316/00	Plexi Frame	
7	225/00404/00	Operating Sticker	With ECO
	225/00405/00	Operating Sticker	Without ECO
8	210/00902/00	Infrared Cable	
9	209/00248/20	Mushroom Pushbutton	
10	209/00520/00	Telem Sticker	
11	209/00099/26	Contact Switch	
12	209/00372/01	Fuse	125 mA
13	229/00255/00	Insulating Sticker	

© Copyright, Alliance Laundry Systems LLC – DO NOT COPY or TRANSMIT

Control Panel - Micro-20 and Sigma Coin

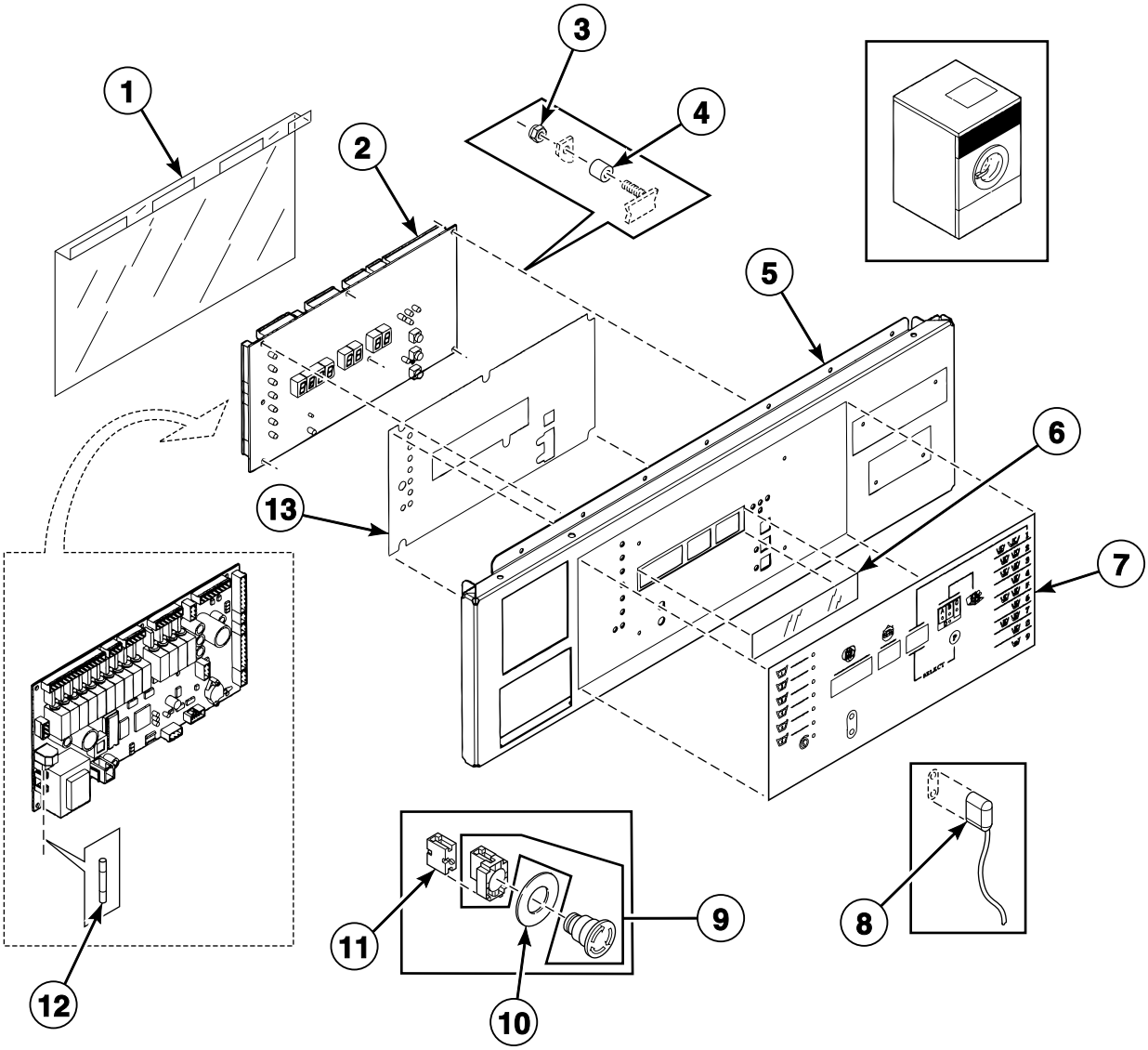

BE000629P_D0902

© Copyright, Alliance Laundry Systems LLC – DO NOT COPY or TRANSMIT

Control Panel - Micro-20 and Sigma Coin

REF	PART NO.	DESCRIPTION	COMMENTS
1	229/00262/00	Circuit Board Cover	
2	209/00547/00	Control Board	Sigma models
	209/00440/70	Printboard	Micro-20 models; 220 Volt
	209/00440/80	Printboard	Micro-20 models; 115 Volt
3	204/00116/00	Nut	
4	211/00122/00	Standoff	
5	245/00124/00	Facia and Outer Coin Box Assembly Kit	
6	225/00316/00	Plexi Frame	
7	225/00406/00	Operating Label	Micro-20 models
	225/00403/00	Decal	Sigma models
8	210/00902/00	Infrared Cable	
9	209/00248/20	Mushroom Pushbutton	
10	209/00520/00	Telem Sticker	
11	209/00099/26	Contact Switch	
12	209/00372/01	Fuse	125 mA
13	229/00255/00	Insulating Sticker	

© Copyright, Alliance Laundry Systems LLC – DO NOT COPY or TRANSMIT

Control Panel - PS40F

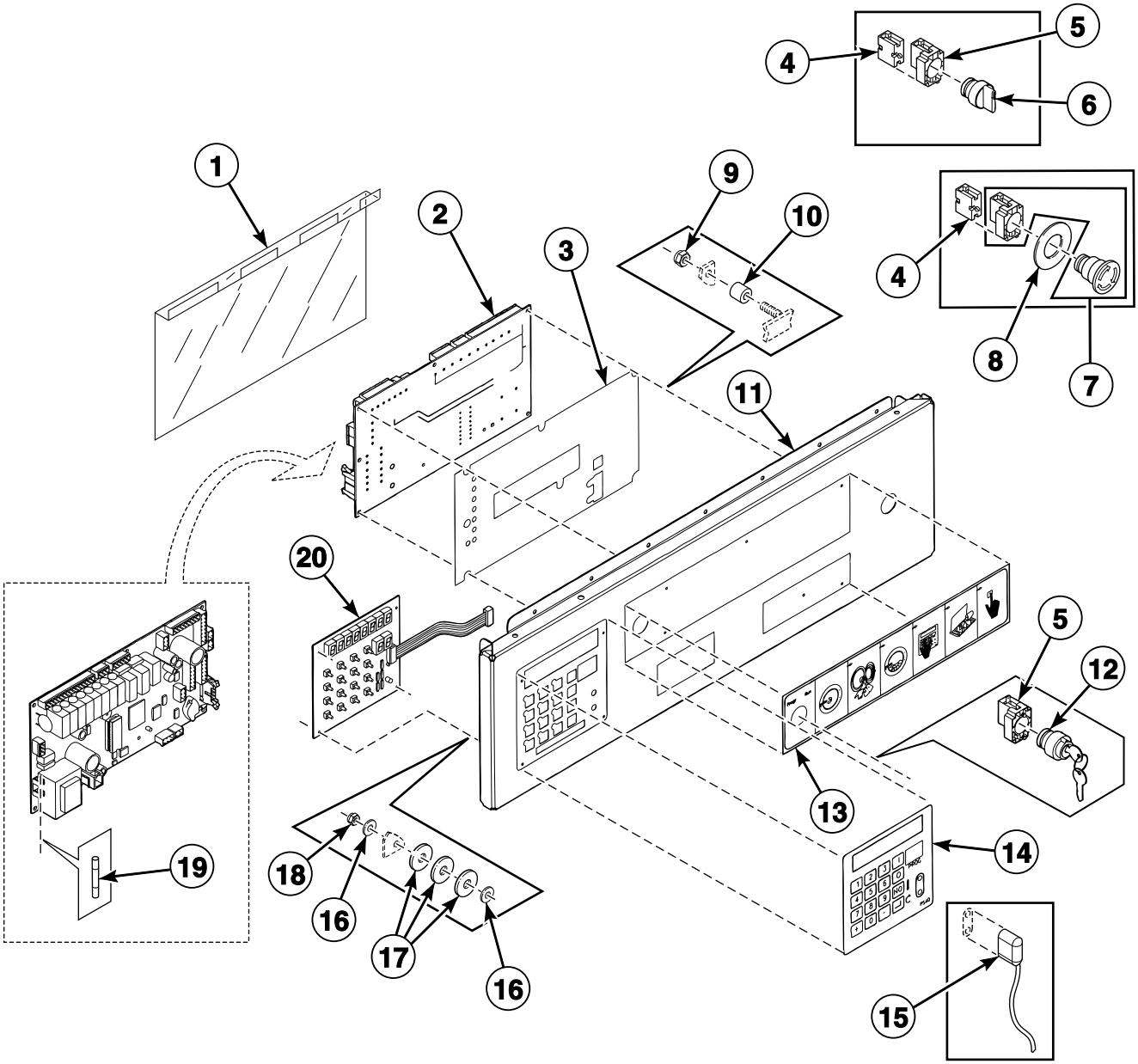

© Copyright, Alliance Laundry Systems LLC – DO NOT COPY or TRANSMIT

Control Panel - PS40F

REF	PART NO.	DESCRIPTION	COMMENTS
1	229/00262/00	Circuit Board Cover	
2	B12351701	Main Board	
3	229/00255/00	Insulating Sticker	
4	209/00099/26	Contact Switch	
5	209/00099/25	Switch Base	
6	209/00099/29	Switch Knob	
7	209/00248/20	Mushroom Pushbutton	
8	209/00520/00	Telem Sticker	
9	204/00116/00	Nut	
10	211/00122/00	Standoff	
11	111/01848/00	Upper Front Panel	HC and IHC models
	111/01963/00	Upper Front Panel	CHC and HC models
12	209/00326/20	Programming Key Contact Switch	
13	225/00400/00	Operating Sticker	
14	225/00397/00	Label	
15	210/00902/00	Infrared Cable	
16	223/00123/00	Washer	
17	223/00051/10	Washer	
18	204/00116/00	Nut	
19	209/00372/01	Fuse	125 mA; Used with 209/00552/02 Printboard
	209/00552/11	Fuse	80mA; Used with B12351701 Main Board
20	209/00552/01	Keypad	

© Copyright, Alliance Laundry Systems LLC – DO NOT COPY or TRANSMIT

Coin Drop - Mechanical Coin Meter

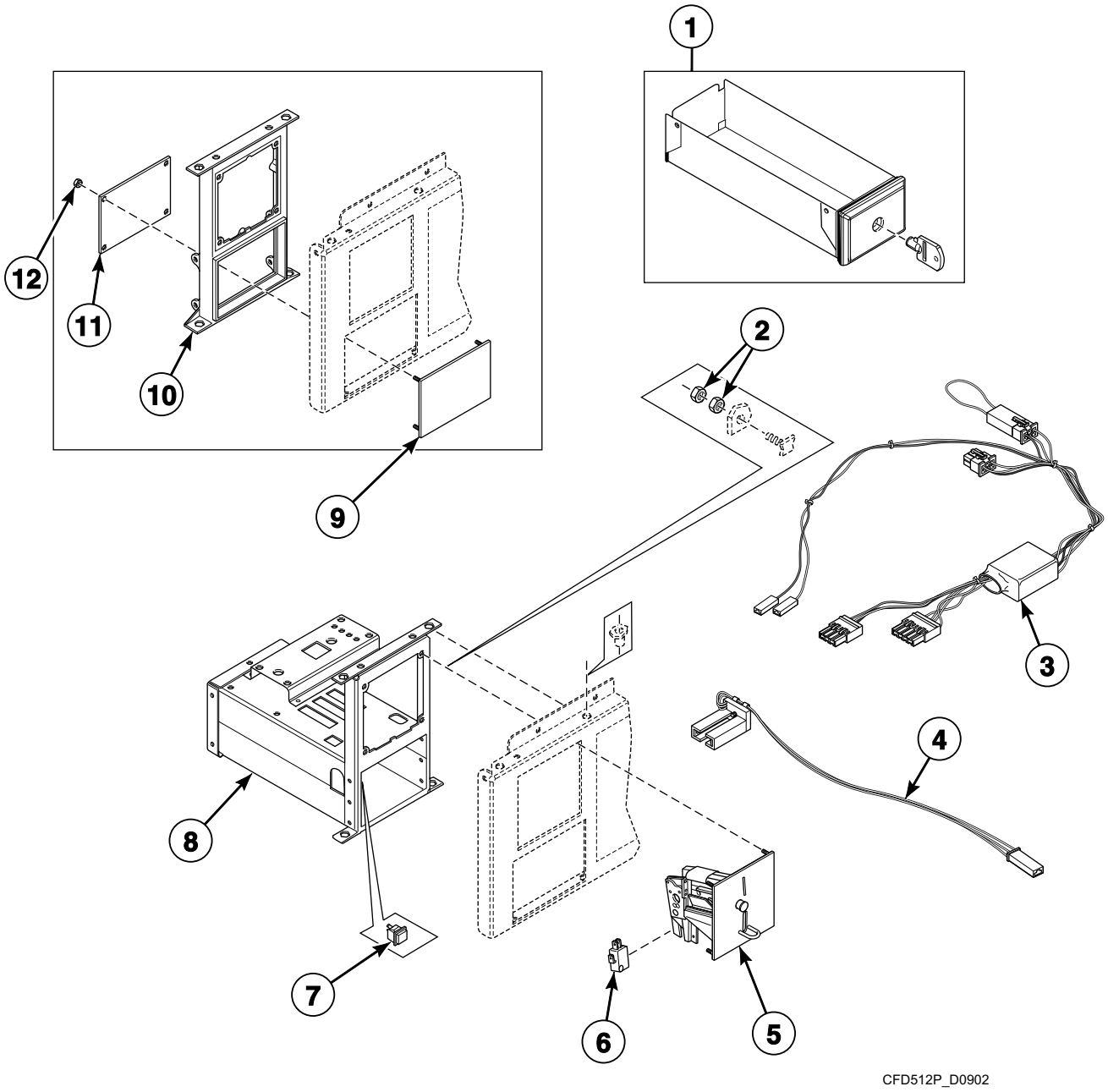

© Copyright, Alliance Laundry Systems LLC – DO NOT COPY or TRANSMIT

Coin Drop - Mechanical Coin Meter

REF	PART NO.	DESCRIPTION	COMMENTS
	B12388101	Single Drop Optical Sensor Kit	Includes items 3 and 4
	B12388102	Dual Drop Optical Sensor Kit	Includes items 3 and 4
1	254/00077/00	Coin Box	
	254/00077/02	Key	
2	204/00008/00	Nut	
3	B12359901	Wire Assembly	Micro-20 and Sigma models
4	209/00781/00	Optical Switch	Micro-20 and Sigma models
5	B12311224	Coin Drop	Mechanical; Jeton 5K
	B12311206	Coin Drop	Mechanical; Jeton 7K
	B12311201	Coin Drop	Mechanical; Jeton 10K
	B12311210	Coin Drop	Mechanical; Jeton 12K
	B12311252	Coin Drop	Mechanical; Jeton 10K and .5 euro
	B12311211	Coin Drop	Mechanical; Jeton 7K and 1 euro
	B12323901	Coin Drop	Mechanical; Jeton 15K and 7K
	B12311204	Coin Drop	Mechanical; Jeton gettone
	B12311234	Coin Drop	Mechanical; Jeton crouzet
	B12311247	Coin Drop	Mechanical; Jeton 118-1
	B12311248	Coin Drop	Mechanical; Jeton 118-5
	B12311222	Coin Drop	Mechanical; 1 euro
	B12311214	Coin Drop	Mechanical; .5 euro
	B12311202	Coin Drop	Mechanical; .5 and 1 euro
	B12311239	Coin Drop	Mechanical; .5 and 2 euro
	B12311205	Coin Drop	Mechanical; .2 and 1 euro
	B11211209	Coin Drop	Mechanical; .2 and .5 euro
	B12311218	Coin Drop	Mechanical; 1 and 1 euro
	B12311219	Coin Drop	Mechanical; 1 and 2 euro
	B12311203	Coin Drop	Mechanical; 1 and 2 frank
	B12311207	Coin Drop	Mechanical; 1 Deense kroon
	B12311225	Coin Drop	Mechanical; 10 Deense kronen
	B12311235	Coin Drop	Mechanical; 10 Tsjechische kronen
	B12311244	Coin Drop	Mechanical; 10 Noorse kronen
	B12311208	Coin Drop	Mechanical; 100 and 500 yen
	B12311212	Coin Drop	Mechanical; 15K
	B12311215	Coin Drop	Mechanical; 1 kro
	B12311226	Coin Drop	Mechanical; Australia 1.00
	B12311216	Coin Drop	Mechanical; Australia .2 and 1.00
	B12311220	Coin Drop	Mechanical; New Zealand 1.00
	B12311221	Coin Drop	Mechanical; .5 and 2 zwitsers
	B12311241	Coin Drop	Mechanical; Hong Kong 1.00
	B12311249	Coin Drop	Mechanical; Hong Kong 5.00
	B12311301	Coin Drop	Mechanical; U.S. $0.25
	B12311302	Coin Drop	Mechanical; U.S. $0.25 and $1.00
	B12311304	Coin Drop	Mechanical; Canada 1.00 and .25
	B12323401	Coin Drop	Mechanical; Singapore 1.00
6	209/00600/01P	Switch	
7	209/00396/00	Pushbutton	
8	152/00112/00	Mechanical Coin Meter Housing	
9	111/01001/00	Top Panel	Gray
	111/01000/00	Front Plate	Black
10	217/00060/00	Fastening Piece	
11	111/01002/00	Backplate	
12	204/00116/00	Nut	

© Copyright, Alliance Laundry Systems LLC – DO NOT COPY or TRANSMIT

Coin Drop - Electronic Coin Meter

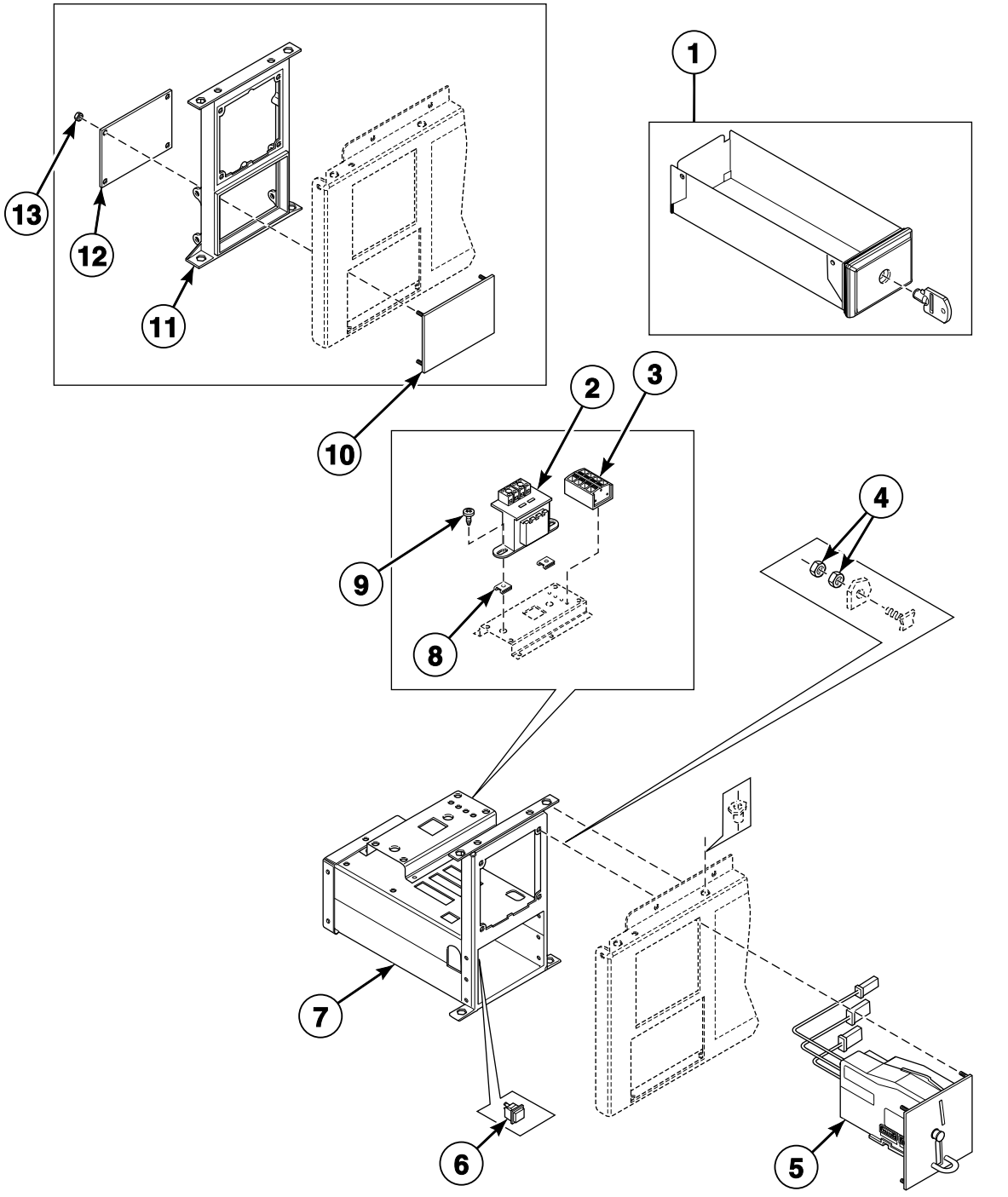

© Copyright, Alliance Laundry Systems LLC – DO NOT COPY or TRANSMIT

Coin Drop - Electronic Coin Meter

REF	PART NO.	DESCRIPTION	COMMENTS
1	254/00077/00	Coin Box	
	254/00077/02	Key	
2	209/00682/00	Transformer	
3	209/00683/00	Input Block	
4	204/00008/00	Nut	
5	B12311401	Coin Drop	Electronic; Cygnus models
6	209/00396/00	Pushbutton	
7	152/00112/50	Electronic Coin Meter Housing	
8	208/00002/00	Nut	
9	208/00014/00	Screw	
10	111/01001/00	Top Panel	Gray
	111/01000/00	Front Plate	Black
11	217/00060/00	Fastening Piece	
12	111/01002/00	Backplate	
13	204/00116/00	Nut	

© Copyright, Alliance Laundry Systems LLC – DO NOT COPY or TRANSMIT

Right Side, Front, Lower Rear and Top Panels - Models with Pump Drain

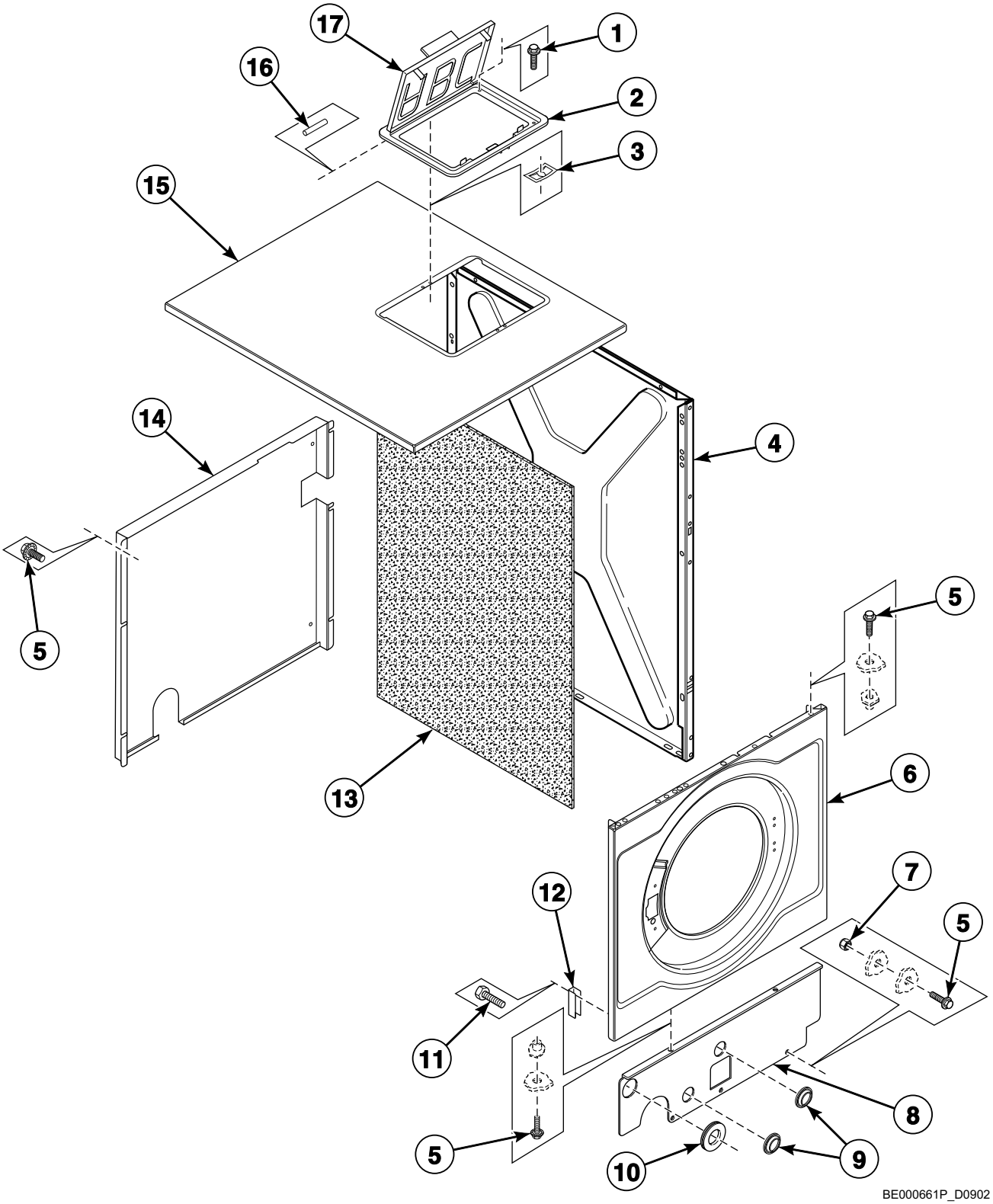

© Copyright, Alliance Laundry Systems LLC – DO NOT COPY or TRANSMIT

Right Side, Front, Lower Rear and Top Panels - Models with Pump Drain

REF	PART NO.	DESCRIPTION	COMMENTS
1	207/00125/00	Bolt	
2	223/00103/03	Soap Dispenser Frame	
3	208/00104/00	Nut	
4	111/10089/00	Side Panel	*18, *65 and *75 models; Stainless steel
	111/10097/00	Side Panel	*25 and *100 models; Stainless steel
	111/10128/00	Side Panel	*12 and *60 models; Stainless steel
	111/60048/00	Side Panel	*12 and *60 models; Black
	111/60031/00	Side Panel	*18, *65 and *75 models; Black
	111/60034/00	Side Panel	*25 and *100 models; Black
5	206/00099/00	Bolt	
6	111/00284/00	Front Panel	
7	204/00009/00	Nut	
8	111/00289/00	Pump Protection Plate	
9	223/00198/00	Grommet	
10	223/00231/00	Cable Duct	
11	206/00114/00	Bolt	
12	111/10089/01	Reinforcement Plate	
13	246/00079/00	Side Panel Gasket	
14	111/10427/01	Lower Rear Panel	
15	111/22141/00	Top Panel	*18, *65 and *75 models
	111/22142/00	Top Panel	*25 and *100 models
	155/00142/00	Top Panel	*12 and *60 models
16	223/00103/04	Soap Dispenser Cover Hinge Rod	2 required
17	223/00103/01	Soap Dispenser Cover	

© Copyright, Alliance Laundry Systems LLC – DO NOT COPY or TRANSMIT

Right Side, Front, Lower Rear and Top Panels - Models without Pump Drain

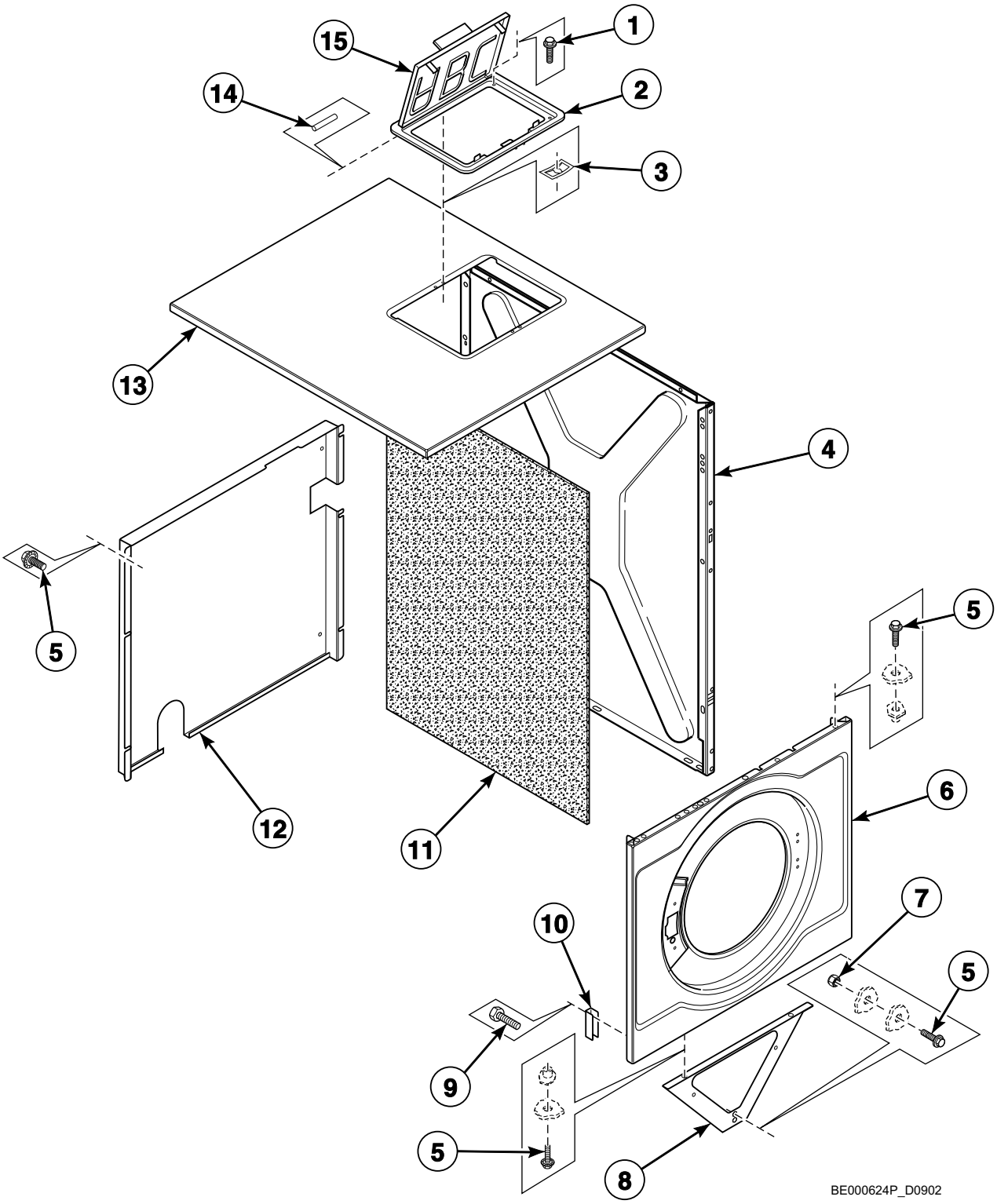

© Copyright, Alliance Laundry Systems LLC – DO NOT COPY or TRANSMIT

Right Side, Front, Lower Rear and Top Panels - Models without Pump Drain

REF	PART NO.	DESCRIPTION	COMMENTS
1	207/00125/00	Bolt	
2	223/00103/03	Soap Dispenser Frame	
3	208/00104/00	Nut	
4	111/10089/00	Side Panel	*18, *65 and *75 models; Stainless steel
	111/10097/00	Side Panel	*25 and *100 models; Stainless steel
	111/10128/00	Side Panel	*12 and *60 models; Stainless steel
	111/60048/00	Side Panel	*12 and *60 models; Black
	111/60031/00	Side Panel	*18, *65 and *75 models; Black
	111/60034/00	Side Panel	*25 and *100 models; Black
5	206/00099/00	Bolt	
6	111/00284/00	Front Panel	
7	204/00009/00	Nut	
8	155/00144/00	Reinforcing Triangle	
9	206/00114/00	Bolt	
10	111/10089/01	Reinforcement Plate	
11	246/00079/00	Side Panel Gasket	
12	111/10427/01	Lower Rear Panel	
13	111/22141/00	Top Panel	*18, *65 and *75 models
	111/22142/00	Top Panel	*25 and *100 models
	155/00142/00	Top Panel	*12 and *60 models
14	223/00103/04	Soap Dispenser Cover Hinge Rod	2 required
15	223/00103/01	Soap Dispenser Cover	

© Copyright, Alliance Laundry Systems LLC – DO NOT COPY or TRANSMIT

Left Side, Lower Front and Upper Back Panels

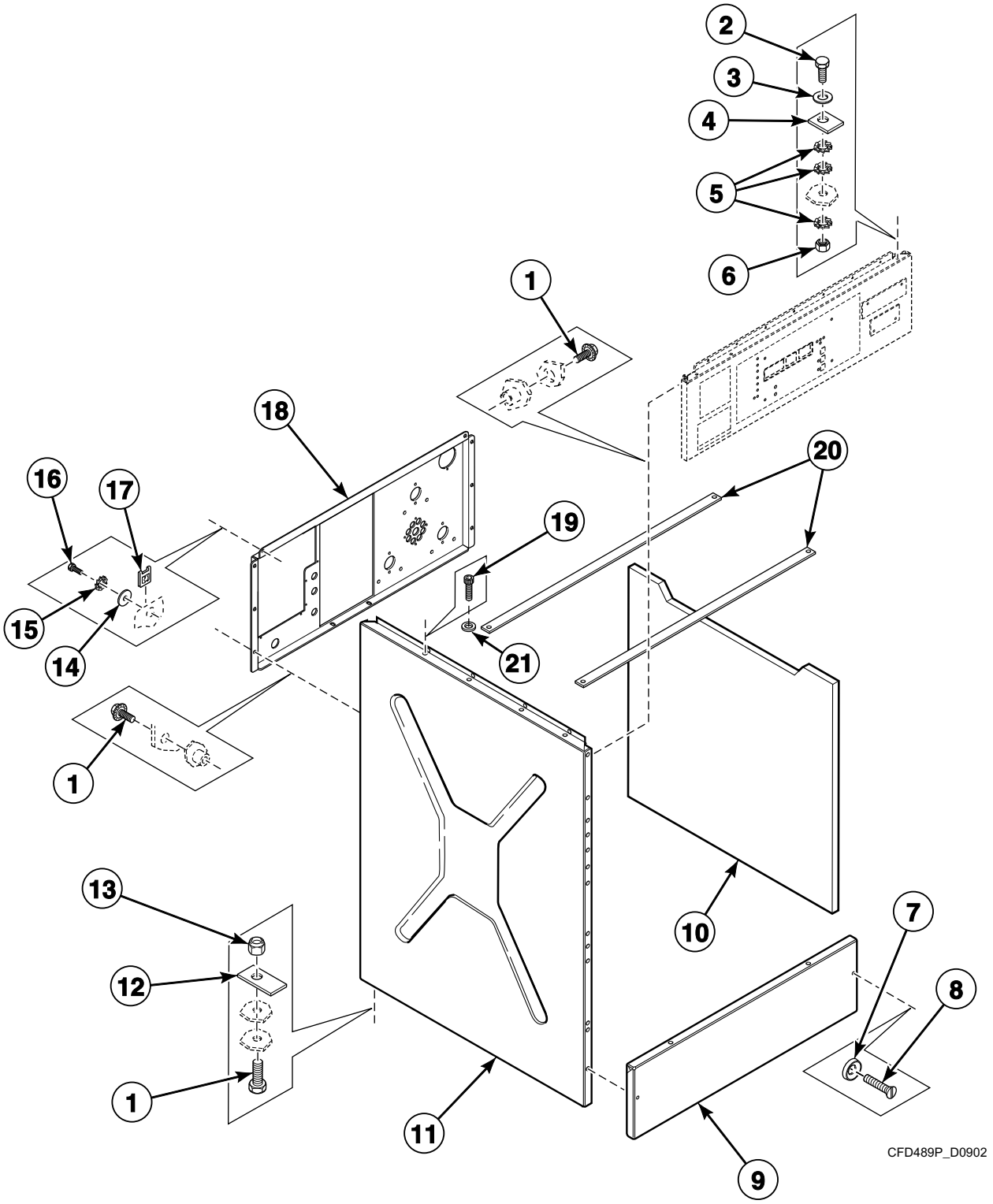

© Copyright, Alliance Laundry Systems LLC – DO NOT COPY or TRANSMIT

Left Side, Lower Front and Upper Back Panels

REF	PART NO.	DESCRIPTION	COMMENTS
1	206/00099/00	Bolt	
2	205/00106/00	Bolt	
3	202/00003/00	Washer	
4	117/00042/00	Retaining Ring	
5	203/00005/00	Washer	
6	204/00006/00	Nut	
7	208/00009/00	Washer	
8	207/00101/00	Screw	
9	111/00285/00	Lower Front Panel	
10	246/00079/00	Side Panel Gasket	
11	111/10089/00	Side Panel	*18, *65 and *75 models; Stainless steel
	111/10097/00	Side Panel	*25 and *100 models; Stainless steel
	111/10128/00	Side Panel	*12 and *60 models; Stainless steel
	111/60048/00	Side Panel	*12 and *60 models; Black
	111/60031/00	Side Panel	*18, *65 and *75 models; Black
	111/60034/00	Side Panel	*25 and *100 models; Black
12	101/00007/00	Outlet Pipe Plate Assembly	
13	204/00009/00	Nut	
14	201/00006/00	Washer	
15	203/00015/00	Washer	
16	208/00014/00	Screw	
17	208/00025/00	Nut	
18	111/01832/00	Backbridge	
19	206/00166/00	Screw	
20	155/00162/00	Crossbar Soap Dispenser	
21	B12421401	Washer	

© Copyright, Alliance Laundry Systems LLC – DO NOT COPY or TRANSMIT

Inverter Drive - Models Through 2/22/09 (Drawing 1 of 2)

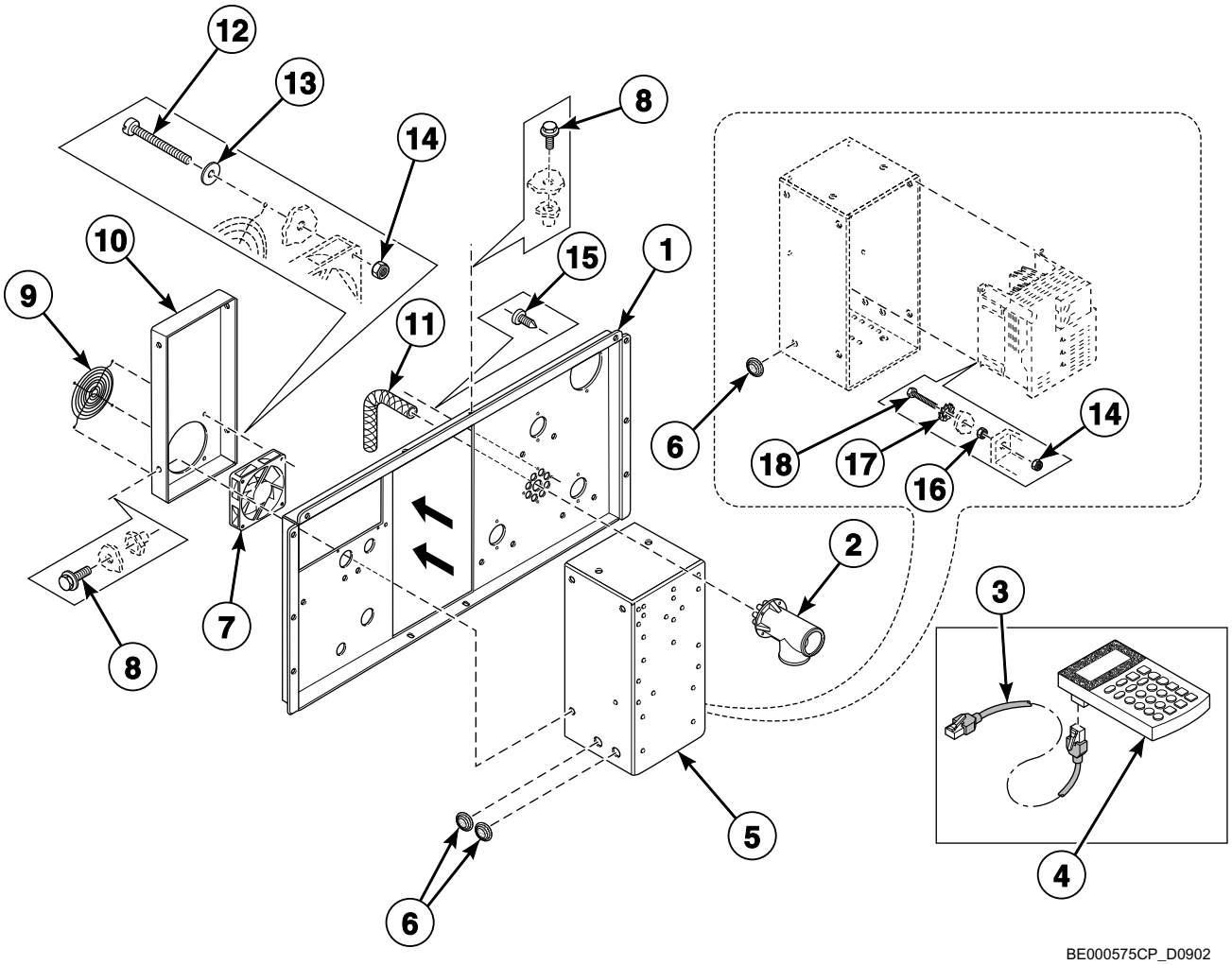

© Copyright, Alliance Laundry Systems LLC – DO NOT COPY or TRANSMIT

Inverter Drive - Models Through 2/22/09 (Drawing 1 of 2)

REF	PART NO.	DESCRIPTION	COMMENTS
1	111/10426/90	Backbridge	
2	223/00250/00	Liquid Soap Manifold	
3	227/00171/10	Parameter Unit Program Cable	
4	227/00171/00	Parameter Unit Assembly	Hand held
	F8410901	Parameter Unit Assembly	E500 series; Inverter mounted
5	111/10425/00	Inverter Drive Box	Used with FR-E520 and FR-E540 series drivers
	111/10425/50	Inverter Drive Box	Used with FR-D720 and FR-D740 series drivers
6	223/00174/00	Grommet	
7	209/00465/00	Fan	
8	206/00099/00	Bolt	
9	209/00465/01	Fan Grill	
10	111/10425/11	Inverter Box Cover	For machines manufactured with a 520 or 540 series inverter and then converted to a 720 or 740 series
	111/10425/01	Inverter Box Cover	All other applications
11	223/00179/10	Pressure Hose	
12	207/00121/00	Screw	
13	202/00004/00	Washer	
14	204/00114/00	Nut	
15	208/00130/00	Screw	
16	204/00007/00	Nut	
17	203/00006/00	Washer	
18	206/00088/00	Bolt	

© Copyright, Alliance Laundry Systems LLC – DO NOT COPY or TRANSMIT

Inverter Drive - Models Through 2/22/09 (Drawing 2 of 2)

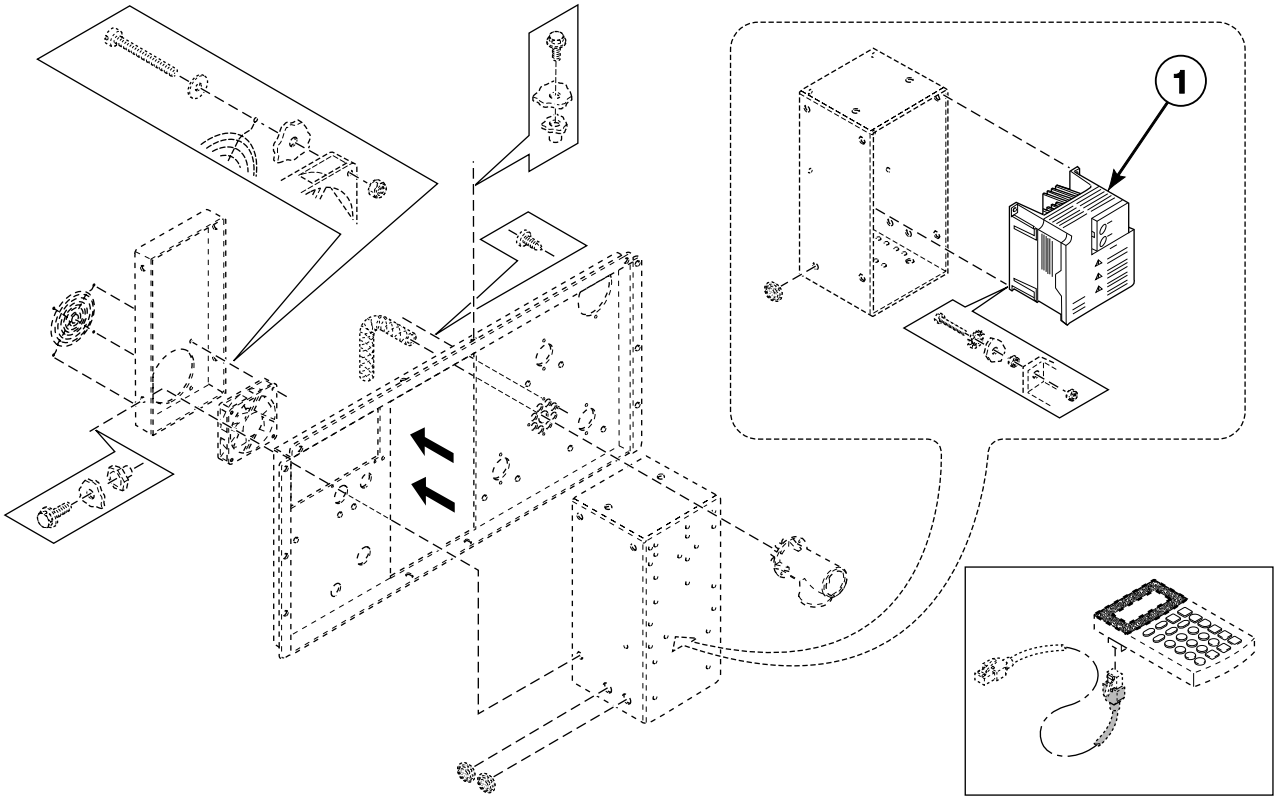

BE000575CPA_D0902

© Copyright, Alliance Laundry Systems LLC – DO NOT COPY or TRANSMIT

Inverter Drive - Models Through 2/22/09 (Drawing 2 of 2)

REF	PART NO.	DESCRIPTION	COMMENTS
1	227/00124/00	Inverter Drive	FR-E520 series; 1x230 Volt; .75 kW
	227/00166/00	Inverter	FR-E520 series; 1x230 Volt; .4 kW
	227/00167/00	Inverter Drive	FR-E540 series; 3x400 Volt
	227/00236/00	Inverter Drive	Cygnus models; FR-D740 series; 3x400 Volt
	227/00227/00	Inverter	*HC060 and HC60 Cygnus models; FR-D720 series; 1x230 Volt; .4 kW
	227/00228/00	Inverter Drive	HC65, *HC065, HC75, *HC075, HC100 and *HC100 Cygnus models; FR-D720 series; 1x230 Volt; .75 kW
	F8420801	Inverter Drive Kit	*HC012, HC60, and *HC060 non-Cygnus models; 200 Volt/1 Phase; Used with .55 kW motor; Used to convert from 500 to 700-series inverter drive; Includes F8420901 Inverter Drive, F8409501 Mounting Plate Assembly and F430903 Screw
	F8420901	Inverter Drive	*HC012, HC60, and *HC060 non-Cygnus models; 200 Volt/1 Phase; Used with .55 kW motor; 700-series inverter drive
	F8420802	Inverter Drive Kit	*HC012, HC60, and *HC060 non-Cygnus models; 400 Volt/3 Phase; Used with .75 kW motor; Used to convert from 500 to 700-series inverter drive; Includes F8420902 Inverter Drive, F8409501 Mounting Plate Assembly and F430903 Screw
	F8420902	Inverter Drive	*HC012, HC60, and *HC060 non-Cygnus models; 400 Volt/3 Phase; Used with .75 kW motor; 700-series inverter drive
	F8420803	Inverter Drive Kit	HC65 and IHC065 non-Cygnus models; 200 Volt/1 Phase; Used with .75 kW motor; Used to convert from 500 to 700-series inverter drive; Includes F8420903 Inverter Drive, 111/10425/11 Inverter Box Cover, F8409501 Mounting Plate Assembly and F430903 Screw
	F8420903	Inverter Drive	HC65 and IHC065 non-Cygnus models; 200 Volt/1 Phase; Used with .75 kW motor; 700-series inverter drive
	F8420804	Inverter Drive Kit	HC65 and IHC065 non-Cygnus models; 400 Volt/3 Phase; Used with .75 kW motor; Used to convert from 500 to 700-series inverter drive; Includes F8420904 Inverter Drive, F8409501 Mounting Plate Assembly and F430903 Screw
	F8420904	Inverter Drive	HC65 and IHC065 non-Cygnus models; 400 Volt/3 Phase; Used with .75 kW motor; 700-series inverter drive
	F8420805	Inverter Drive Kit	*HC018, *HC075 and HC75 non-Cygnus models; 200 Volt/1 Phase; Used with .75 kW motor; Used to convert from 500 to 700-series inverter drive; Includes F8420905 Inverter Drive, 111/10425/11 Inverter Box Cover, F8409501 Mounting Plate Assembly and F430903 Screw
	F8420905	Inverter Drive	*HC018, *HC075 and HC75 non-Cygnus models; 200 Volt/1 Phase; Used with .75 kW motor; 700-series inverter drive
	F8420806	Inverter Drive Kit	*HC018, *HC075 and HC75 non-Cygnus models; 400 Volt/3 Phase; Used with .75 kW motor; Used to convert from 500 to 700-series inverter drive; Includes F8420906 Inverter Drive, F8409501 Mounting Plate Assembly and F430903 Screw
	F8420906	Inverter Drive	*HC018, *HC075 and HC75 non-Cygnus models; 400 Volt/3 Phase; Used with .75 kW motor; 700-series inverter drive
	F8420807	Inverter Drive Kit	*HC025 and *HC100 non-Cygnus models; 200 Volt/1 Phase; Used with .75 kW motor; Used to convert from 500 to 700-series inverter drive; Includes F8420907 Inverter Drive, F8409501 Mounting Plate Assembly and F430903 Screw
	F8420907	Inverter Drive	*HC025 and *HC100 non-Cygnus models; 200 Volt/1 Phase; Used with .75 kW motor; 700-series inverter drive
	F8420808	Inverter Drive Kit	*HC025 and *HC100 non-Cygnus models; 400 Volt/3 Phase; Used with .75 kW motor; Used to convert from 500 to 700-series inverter drive; Includes F8420908 Inverter Drive, F8409501 Mounting Plate Assembly and F430903 Screw
	F8420908	Inverter Drive	*HC025 and *HC100 non-Cygnus models; 400 Volt/3 Phase; Used with .75 kW motor; 700-series inverter drive

© Copyright, Alliance Laundry Systems LLC – DO NOT COPY or TRANSMIT

Inverter Drive - Models Starting 2/23/09 (Drawing 1 of 2)

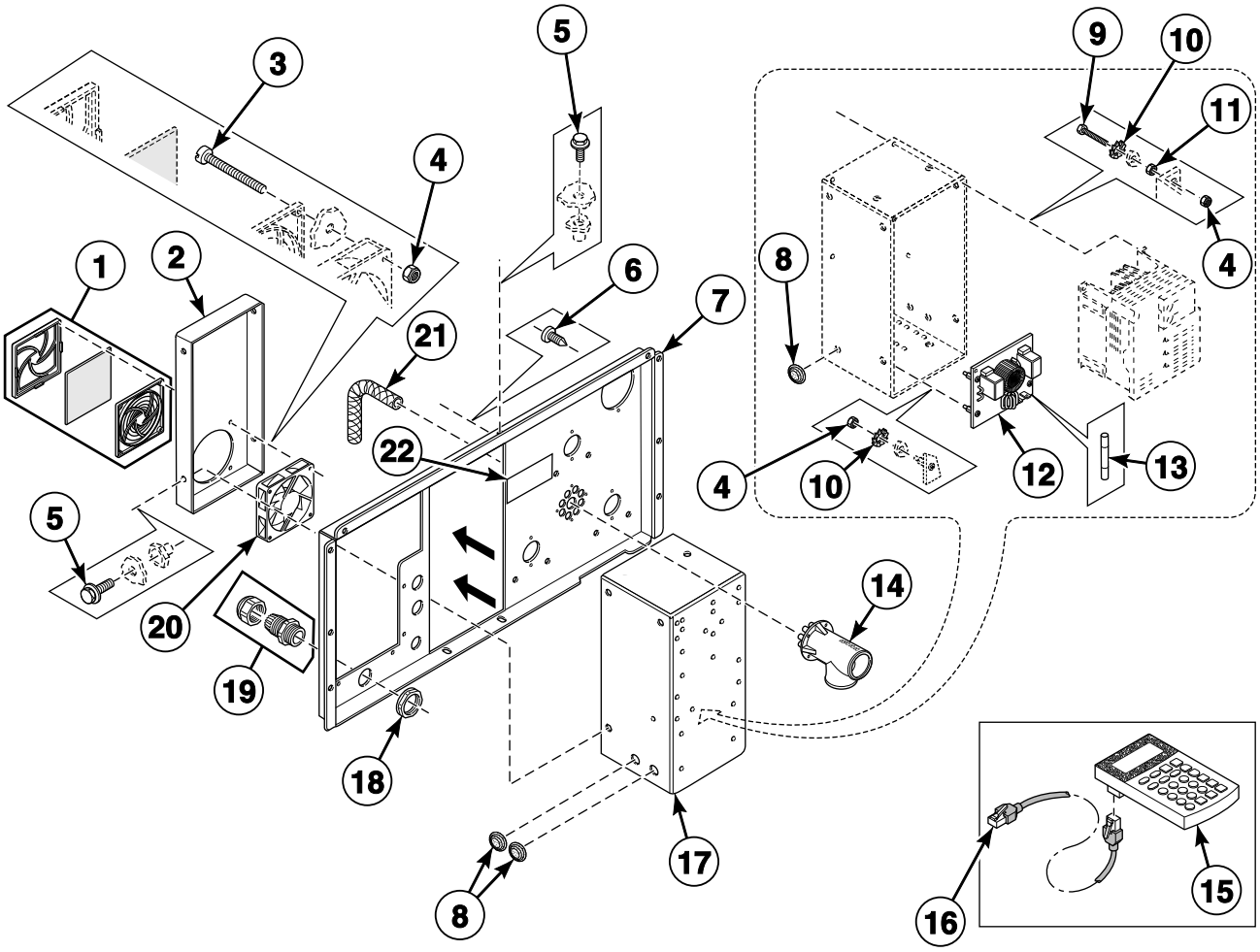

CFD503P_D0902

© Copyright, Alliance Laundry Systems LLC – DO NOT COPY or TRANSMIT

Inverter Drive - Models Starting 2/23/09 (Drawing 1 of 2)

REF	PART NO.	DESCRIPTION	COMMENTS
1	209/00465/11	Fan Filter	Includes filter and holder
	209/00465/21	Filter	Filter only
2	111/10425/11	Inverter Box Cover	For machines manufactured with a 520 or 540 series inverter and then converted to a 720 or 740 series
	111/10425/01	Inverter Box Cover	All other applications
3	207/00021/00	Screw	
4	204/00114/00	Nut	
5	206/00099/00	Bolt	
6	208/00130/00	Screw	
7	111/01832/00	Backbridge	
8	223/00174/00	Grommet	
9	206/00088/00	Bolt	
10	203/00006/00	Washer	
11	204/00007/00	Nut	
12	227/00177/00	Filter	16A1; Models through 3/09
	B12339301	Noise Filter	16A1; Models starting 4/09
	B12339401	Noise Filter	30A1
	227/00242/00	Noise Filter	8A3
	227/00162/00	Noise Filter	15A3
	227/00163/00	Noise Filter	27A3
	B12331701	Filter	55A3
	B12352301	Filter	64A3
13	209/00468/00	Fuse	3.15 A
14	223/00250/00	Liquid Soap Manifold	
15	227/00171/00	Parameter Unit Assembly	Hand held
	F8410901	Parameter Unit Assembly	E500 series; Inverter mounted
16	227/00171/10	Parameter Unit Program Cable	
17	111/10425/00	Inverter Drive Box	Used with FR-E520 and FR-E540 series drivers
	111/10425/50	Inverter Drive Box	Used with FR-D720 and FR-D740 series drivers
18	211/00171/00	Nut	
19	211/00182/00	Nut	
20	209/00465/00	Fan	
21	223/00179/10	Pressure Hose	
22	B12355001	Voltage Discharge Decal	

© Copyright, Alliance Laundry Systems LLC – DO NOT COPY or TRANSMIT

Inverter Drive - Models Starting 2/23/09 (Drawing 2 of 2)

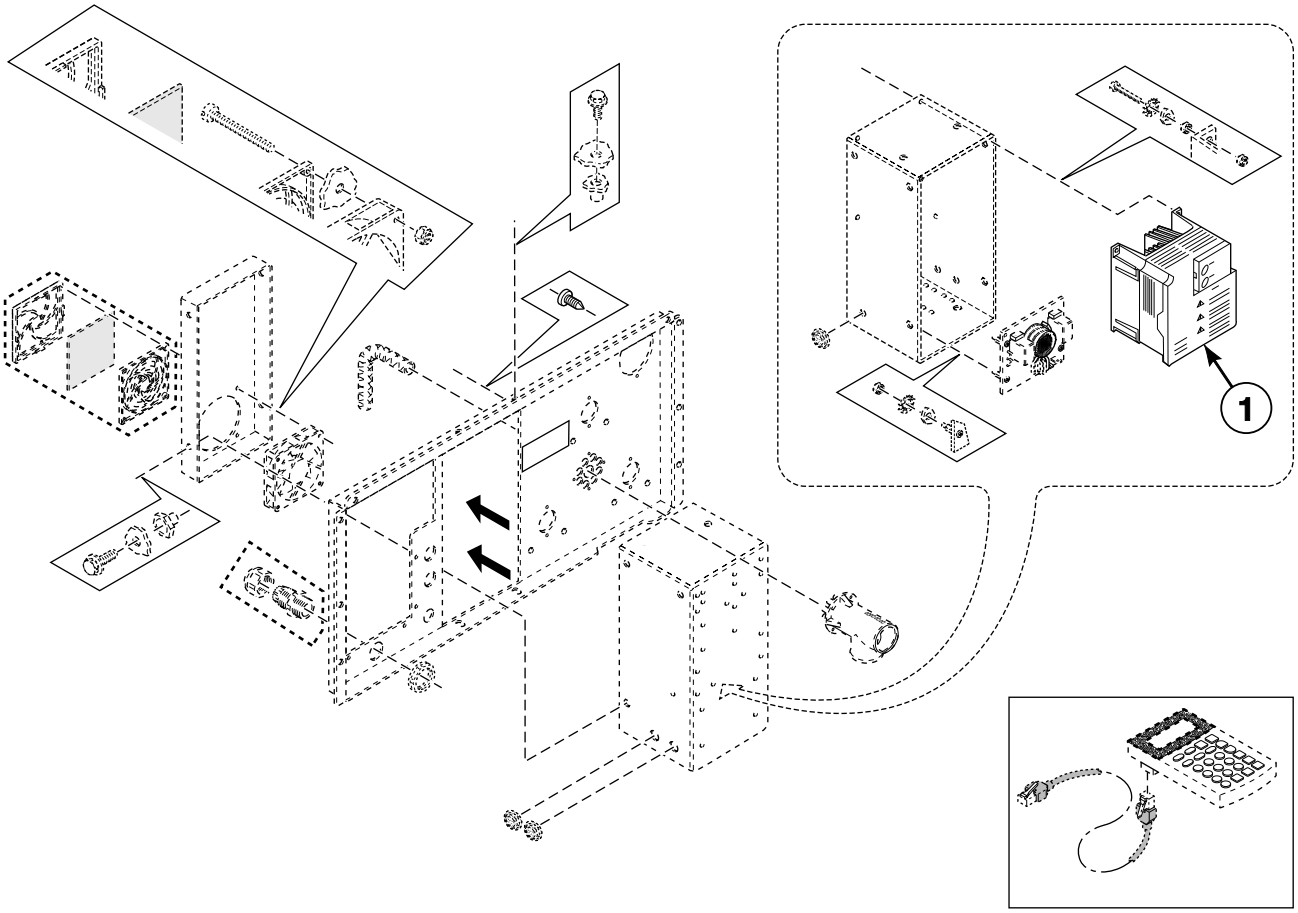

CFS1950PA_D0902

© Copyright, Alliance Laundry Systems LLC – DO NOT COPY or TRANSMIT

Inverter Drive - Models Starting 2/23/09 (Drawing 2 of 2)

REF	PART NO.	DESCRIPTION	COMMENTS
1	227/00227/00	Inverter	FR-E520 series; 1x230 Volt; .4 kW
	227/00167/00	Inverter Drive	FR-E540 series; 3x400 Volt
	227/00228/00	Inverter Drive	FR-E520 series; 1x230 Volt; .75 kW
	227/00236/00	Inverter Drive	Cygnus models; FR-D740 series; 3x400 Volt
	227/00227/00	Inverter	*HC060 and HC60 Cygnus models; FR-D720 series; 1x230 Volt; .4 kW
	227/00228/00	Inverter Drive	*HC065, *HC075, *HC100, HC65 and HC75 Cygnus models; FR-D720 series; 1x230 Volt; .75 kW
	F8420801	Inverter Drive Kit	*HC012, *HC060 and HC60 non-Cygnus models; 200 Volt/1 Phase; Used with .55 kW motor; Used to convert from 500 to 700-series inverter drive; Includes F8420901 Inverter Drive, F8409501 Mounting Plate Assembly and F430903 Screw
	F8420901	Inverter Drive	*HC012, *HC060 and HC60 non-Cygnus models; 200 Volt/1 Phase; Used with .55 kW motor; 700-series inverter drive
	F8420802	Inverter Drive Kit	*HC012, *HC060 and HC60 non-Cygnus models; 400 Volt/3 Phase; Used with .75 kW motor; Used to convert from 500 to 700-series inverter drive; Includes F8420902 Inverter Drive, F8409501 Mounting Plate Assembly and F430903 Screw
	F8420902	Inverter Drive	*HC012, *HC060 and HC60 non-Cygnus models; 400 Volt/3 Phase; Used with .75 kW motor; 700-series inverter drive
	F8420803	Inverter Drive Kit	HC65 and IHC065 non-Cygnus models; 200 Volt/1 Phase; Used with .75 kW motor; Used to convert from 500 to 700-series inverter drive; Includes F8420903 Inverter Drive, 111/10425/11 Inverter Box Cover, F8409501 Mounting Plate Assembly and F430903 Screw
	F8420903	Inverter Drive	HC65 and IHC065 non-Cygnus models; 200 Volt/1 Phase; Used with .75 kW motor; 700-series inverter drive
	F8420804	Inverter Drive Kit	HC65 and IHC065 non-Cygnus models; 400 Volt/3 Phase; Used with .75 kW motor; Used to convert from 500 to 700-series inverter drive; Includes F8420904 Inverter Drive, F8409501 Mounting Plate Assembly and F430903 Screw
	F8420904	Inverter Drive	HC65 and IHC065 non-Cygnus models; 400 Volt/3 Phase; Used with .75 kW motor; 700-series inverter drive
	F8420805	Inverter Drive Kit	*HC018, *HC075 and HC75 non-Cygnus models; 200 Volt/1 Phase; Used with .75 kW motor; Used to convert from 500 to 700-series inverter drive; Includes F8420905 Inverter Drive, 111/10425/11 Inverter Box Cover, F8409501 Mounting Plate Assembly and F430903 Screw
	F8420905	Inverter Drive	*HC018, *HC075 and HC75 non-Cygnus models; 200 Volt/1 Phase; Used with .75 kW motor; 700-series inverter drive
	F8420806	Inverter Drive Kit	*HC018, *HC075 and HC75 non-Cygnus models; 400 Volt/3 Phase; Used with .75 kW motor; Used to convert from 500 to 700-series inverter drive; Includes F8420906 Inverter Drive, F8409501 Mounting Plate Assembly and F430903 Screw
	F8420906	Inverter Drive	*HC018, *HC075 and HC75 non-Cygnus models; 400 Volt/3 Phase; Used with .75 kW motor; 700-series inverter drive
	F8420807	Inverter Drive Kit	*HC025 and *HC100 non-Cygnus models; 200 Volt/1 Phase; Used with .75 kW motor; Used to convert from 500 to 700-series inverter drive; Includes F8420907 Inverter Drive, F8409501 Mounting Plate Assembly and F430903 Screw
	F8420907	Inverter Drive	*HC025 and *HC100 non-Cygnus models; 200 Volt/1 Phase; Used with .75 kW motor; 700-series inverter drive
	F8420808	Inverter Drive Kit	*HC025 and *HC100 non-Cygnus models; 400 Volt/3 Phase; Used with .75 kW motor; Used to convert from 500 to 700-series inverter drive; Includes F8420908 Inverter Drive, F8409501 Mounting Plate Assembly and F430903 Screw
	F8420908	Inverter Drive	*HC025 and *HC100 non-Cygnus models; 400 Volt/3 Phase; Used with .75 kW motor; 700-series inverter drive

© Copyright, Alliance Laundry Systems LLC – DO NOT COPY or TRANSMIT

Upper Back Panel with Circular Ventilation - Models Through 12/31/05

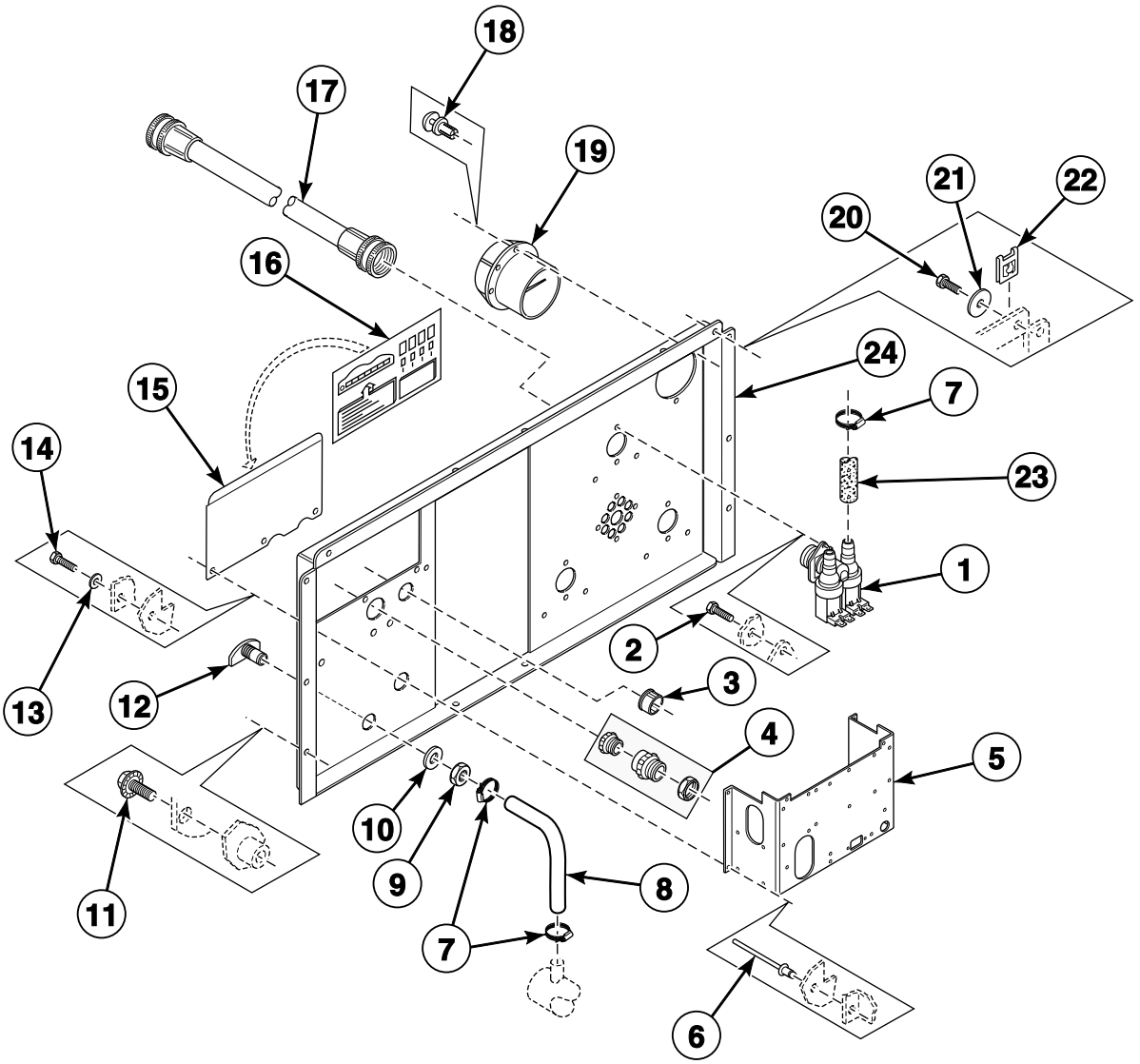

CFD329P_D0902

© Copyright, Alliance Laundry Systems LLC – DO NOT COPY or TRANSMIT

Upper Back Panel with Circular Ventilation - Models Through 12/31/05

REF	PART NO.	DESCRIPTION	COMMENTS
1	209/00110/00	2-Way Inlet Valve	Metric thread
	B12519501	2-Way Inlet Valve	Standard thread; G581P3 Repair Kit
2	206/00027/00	Bolt	
3	211/00091/00	Plug	
4	211/00168/00	Cordlock	
5	111/00188/06	Electrical Connection Plate	
6	208/00017/00	Rivet	
7	F200205	Hose Clamp	
8	223/00044/00	Water Hose	
9	204/00201/00	Nut	
10	201/00002/00	Washer	
11	206/00099/00	Bolt	
12	223/00001/04	Prewash and Mainwash Nozzle	
13	202/00004/00	Washer	
14	206/00014/00	Bolt	
15	111/00094/10	Electrical Connection Plate	
16	229/00068/02	Electrical Connection Sticker	
17	F200164	Water Hose	Standard thread
	F200166	Water Hose	Metric thread
18	211/00093/00	Rivet	
19	223/00102/07	Hose Vent	
20	208/00014/00	Screw	
21	201/00006/00	Washer	
22	208/00002/00	Nut	
23	223/00044/01	Water Hose	
24	111/10426/90	Backbridge	

© Copyright, Alliance Laundry Systems LLC – DO NOT COPY or TRANSMIT

Upper Back Panel with Rectangular Ventilation - Models Through 12/31/05

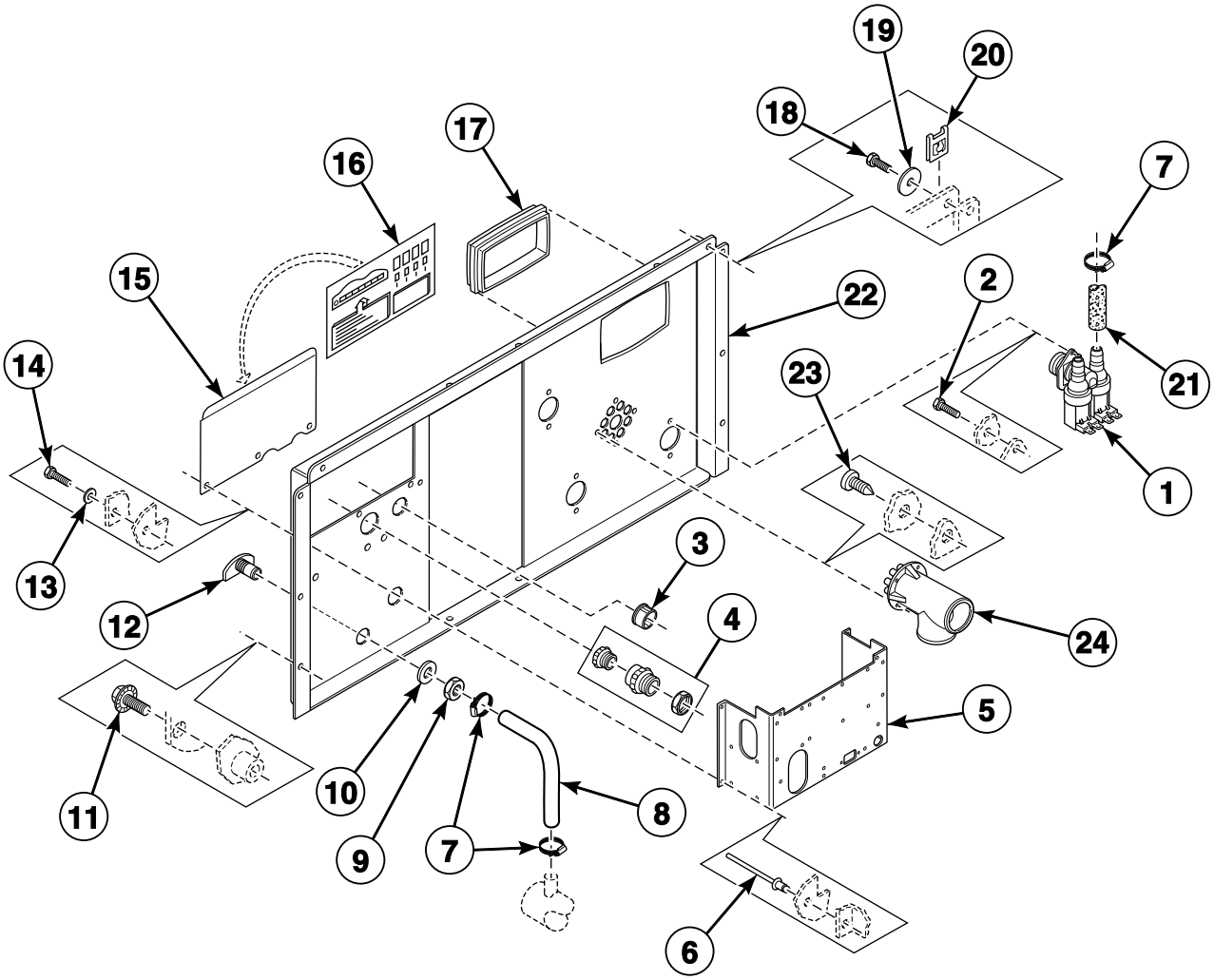

BE000580P_D0902

© Copyright, Alliance Laundry Systems LLC – DO NOT COPY or TRANSMIT

Upper Back Panel with Rectangular Ventilation - Models Through 12/31/05

REF	PART NO.	DESCRIPTION	COMMENTS
1	209/00110/00	2-Way Inlet Valve	Metric thread
	B12519501	2-Way Inlet Valve	Standard thread; G581P3 Repair Kit
2	206/00027/00	Bolt	
3	211/00091/00	Plug	
4	211/00168/00	Cordlock	
5	111/00188/06	Electrical Connection Plate	
6	208/00017/00	Rivet	
7	F200205	Hose Clamp	
8	223/00044/00	Water Hose	
9	204/00201/00	Nut	
10	201/00002/00	Washer	
11	206/00099/00	Bolt	
12	223/00001/04	Prewash and Mainwash Nozzle	
13	202/00004/00	Washer	
14	206/00014/00	Bolt	
15	111/00094/10	Electrical Connection Plate	
16	229/00068/02	Electrical Connection Sticker	
17	223/00226/00	Vent Tube	
18	208/00014/00	Screw	
19	201/00006/00	Washer	
20	208/00002/00	Nut	
21	223/00044/01	Water Hose	
22	111/10426/90	Backbridge	
23	B12350903	Screw	
24	223/00250/00	Liquid Soap Manifold	

© Copyright, Alliance Laundry Systems LLC – DO NOT COPY or TRANSMIT

Upper Back Panel - Models Starting 1/1/06

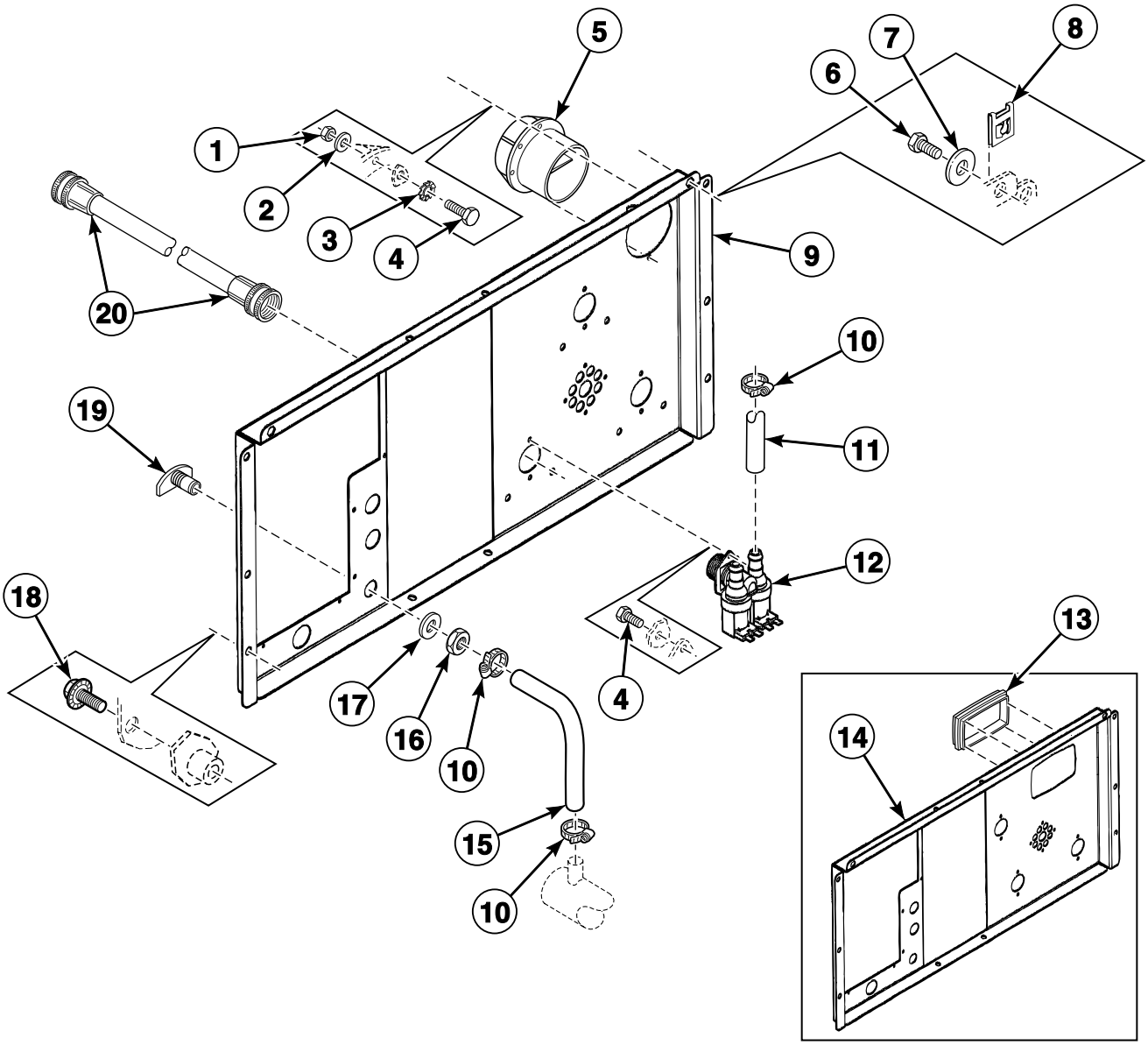

© Copyright, Alliance Laundry Systems LLC – DO NOT COPY or TRANSMIT

Upper Back Panel - Models Starting 1/1/06

REF	PART NO.	DESCRIPTION	COMMENTS
1	204/00007/00	Nut	
2	202/00004/00	Washer	
3	203/00006/00	Washer	
4	206/00027/00	Bolt	
5	223/00102/07	Hose Vent	
6	208/00014/00	Screw	
7	201/00006/00	Washer	
8	208/00002/00	Nut	
9	111/01832/00	Backbridge	Circular ventilation
10	F200205	Hose Clamp	
11	223/00044/00	Water Hose	
12	209/00110/00	2-Way Inlet Valve	Metric thread
	B12519501	2-Way Inlet Valve	Standard thread; G581P3 Repair Kit
13	223/00226/00	Vent Tube	
14	111/01832/10	Upper Backpanel	Rectangular ventilation
15	223/00044/01	Water Hose	
16	204/00201/00	Nut	
17	201/00002/00	Washer	
18	206/00099/00	Bolt	
19	223/00001/04	Prewash and Mainwash Nozzle	
20	F200164	Water Hose	Standard thread
	F200166	Water Hose	Metric thread

© Copyright, Alliance Laundry Systems LLC – DO NOT COPY or TRANSMIT

Main Switch and Noise Filter

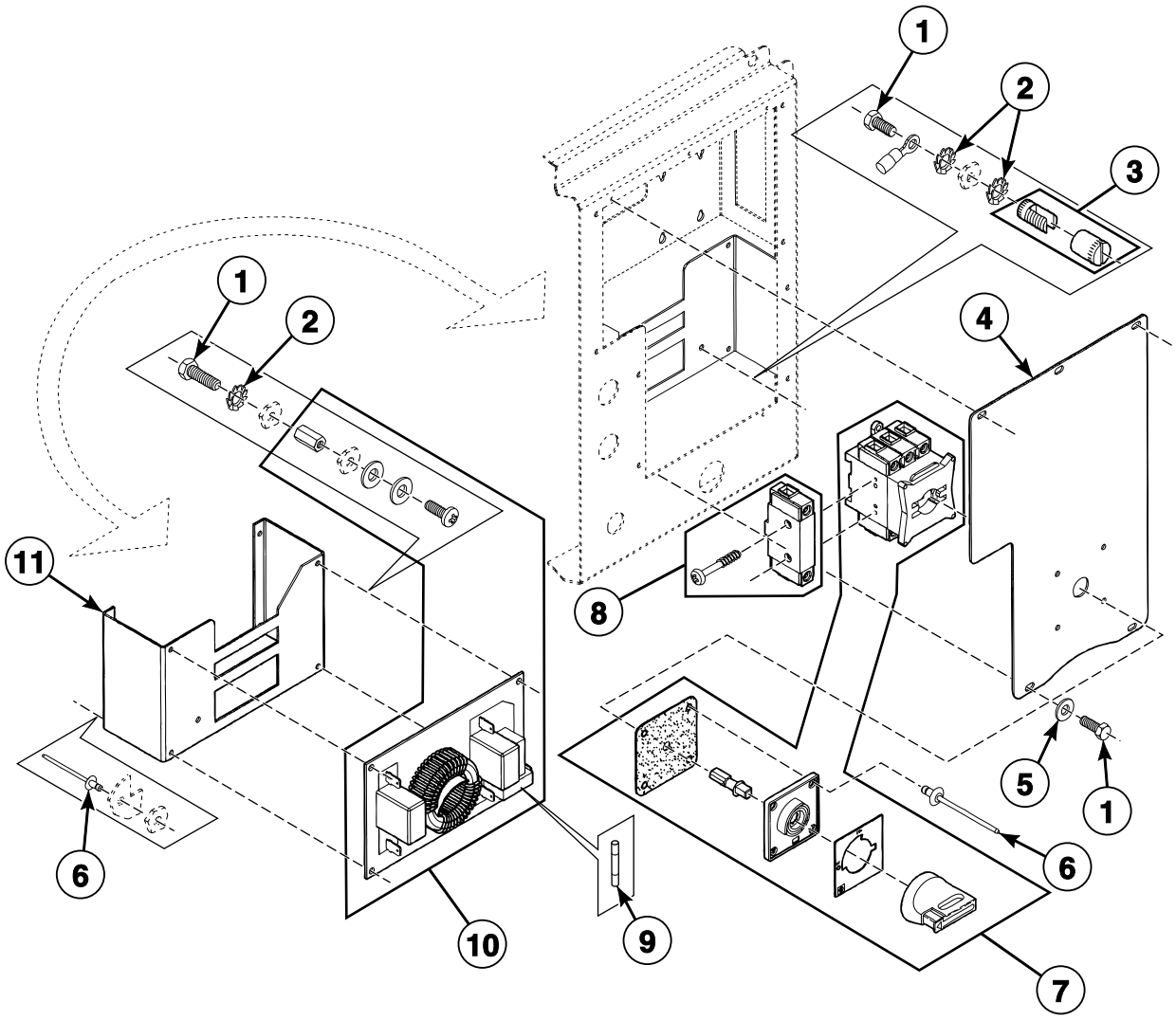

CFD504P_D0902

© Copyright, Alliance Laundry Systems LLC – DO NOT COPY or TRANSMIT

Main Switch and Noise Filter

REF	PART NO.	DESCRIPTION	COMMENTS
1	206/00027/00	Bolt	
2	203/00006/00	Washer	
3	209/00006/01	Ground Terminal	
4	111/01834/00	Main Switch Cover	
5	202/00004/00	Washer	
6	208/00017/00	Rivet	
7	209/00529/00	Main Switch	25A
	209/00672/00	Main Switch	40A
	209/00526/00	Main Switch	80A
8	209/00530/00	Terminal Block	25A
	209/00527/00	Terminal Block	63/80A
9	B12389501	Fuse	3.15 A; Used with 227/00242/00 Filter
10	227/00177/00	Filter	16A1; Models starting 11/03 through 3/09
	B12339301	Noise Filter	16A1; Models starting 4/09
	B12339401	Noise Filter	30A1
	227/00242/00	Noise Filter	8A3
	227/00162/00	Noise Filter	15A3
	227/00163/00	Noise Filter	27A3
	B12331701	Filter	55A3
	B12352301	Filter	64A3
11	111/01837/01	Filter Bracket	

© Copyright, Alliance Laundry Systems LLC – DO NOT COPY or TRANSMIT

Soap Injection Printboard, Network Connection Printboard and Noise Filter - Sigma, PS40F and Micro-20

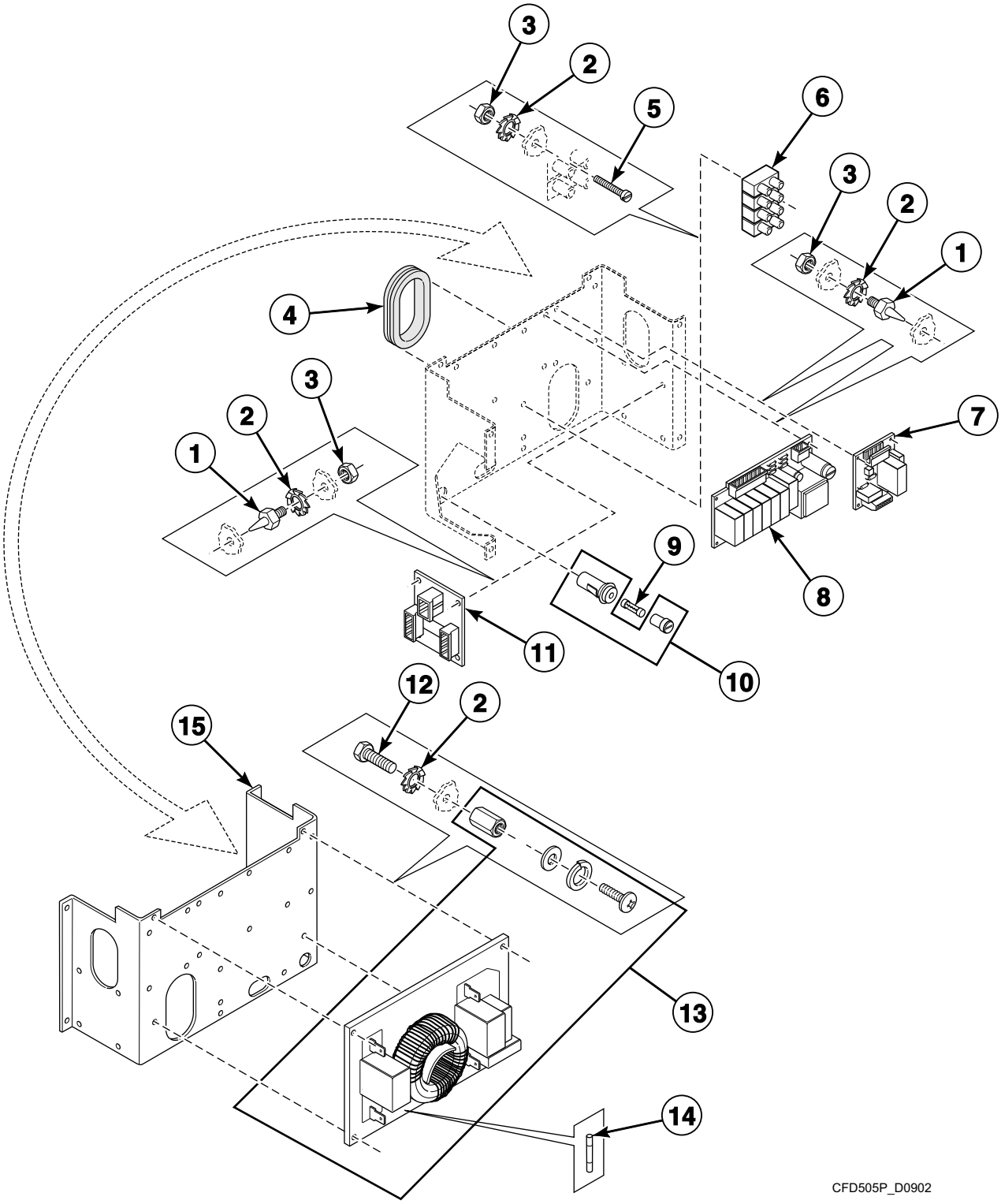

© Copyright, Alliance Laundry Systems LLC – DO NOT COPY or TRANSMIT

Soap Injection Printboard, Network Connection Printboard and Noise Filter - Sigma, PS40F and Micro-20

REF	PART NO.	DESCRIPTION	COMMENTS
1	211/00120/00	Standoff	
2	203/00006/00	Washer	
3	204/00007/00	Nut	
4	223/00203/00	Grommet	
5	207/00031/00	Screw	
6	209/00058/00	Terminal Block	
7	209/00438/50	Central Control Board	
8	209/00218/13	Soap Injection PCB with Fuse	
9	209/00468/00	Fuse	3 Amp
10	209/00202/00	Fuse Holder	
	209/00202/01	Fuse Holder	Includes item 9
11	209/00540/01	Network Connection Printboard	
12	206/00027/00	Bolt	
13	227/00177/00	Filter	16A1; Models starting 11/03 through 3/09
	B12339301	Noise Filter	16A1; Models starting 4/09
	B12339401	Noise Filter	30A1
	227/00242/00	Noise Filter	8A3
	227/00162/00	Noise Filter	15A3
	227/00163/00	Noise Filter	27A3
	B12331701	Filter	55A3
	B12352301	Filter	64A3
14	B12389501	Fuse	3.15 A; Used with 227/00242/00 Filter
15	111/00188/06	Electrical Connection Plate	

© Copyright, Alliance Laundry Systems LLC – DO NOT COPY or TRANSMIT

Central Operating Panel, Network Connection and Soap Injection Printboards - Cygnus Models

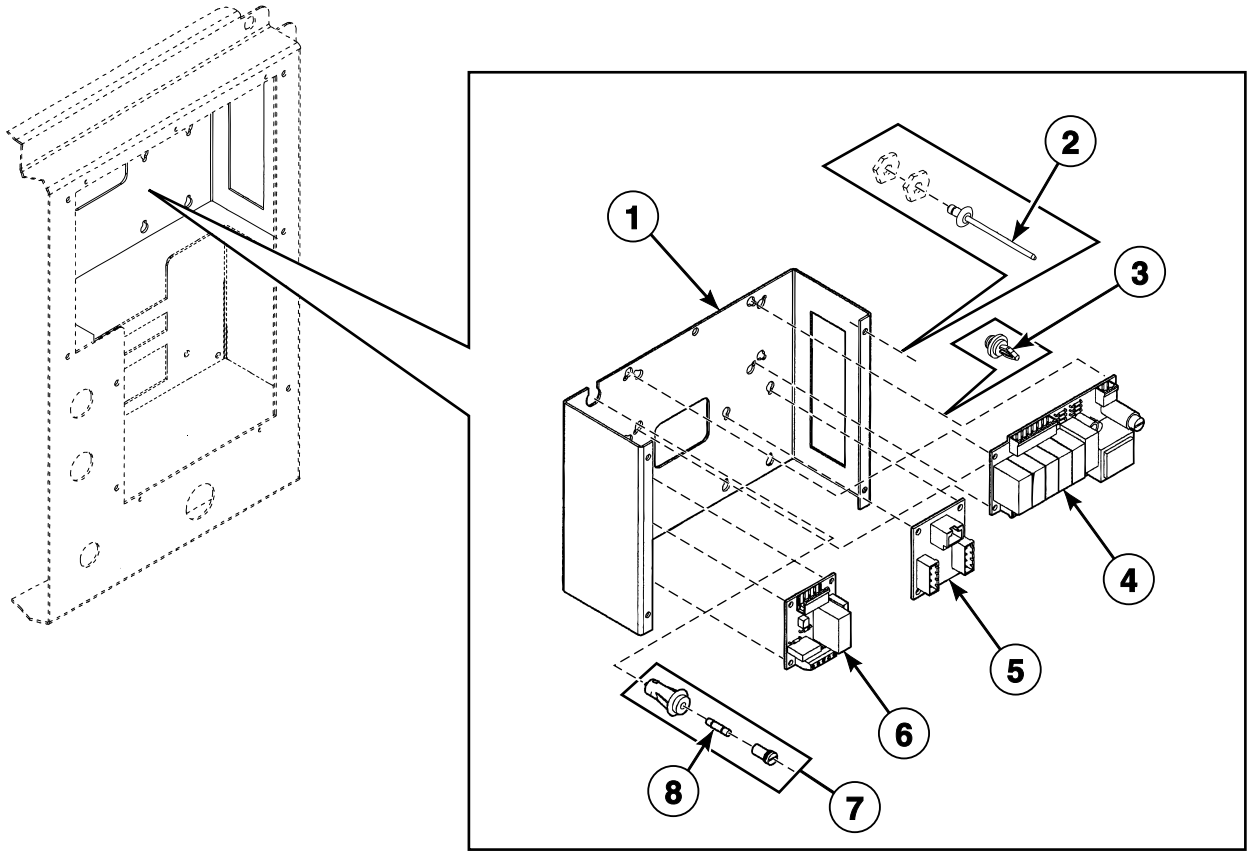

BE000800P_D0902

© Copyright, Alliance Laundry Systems LLC – DO NOT COPY or TRANSMIT

Central Operating Panel, Network Connection and Soap Injection Printboards - Cygnus Models

REF	PART NO.	DESCRIPTION	COMMENTS
1	111/01838/10	Printboard Support	
2	208/00017/00	Rivet	
3	211/00146/00	Standoff	
4	209/00218/13	Soap Injection PCB with Fuse	
5	209/00540/01	Network Connection Printboard	
6	209/00438/50	Central Control Board	
7	209/00202/00	Fuse Holder	
	209/00202/01	Fuse Holder	Includes item 8
8	209/00468/00	Fuse	3 Amp

© Copyright, Alliance Laundry Systems LLC – DO NOT COPY or TRANSMIT

Relay, Network Connection and Main Printboards - Cygnus Models

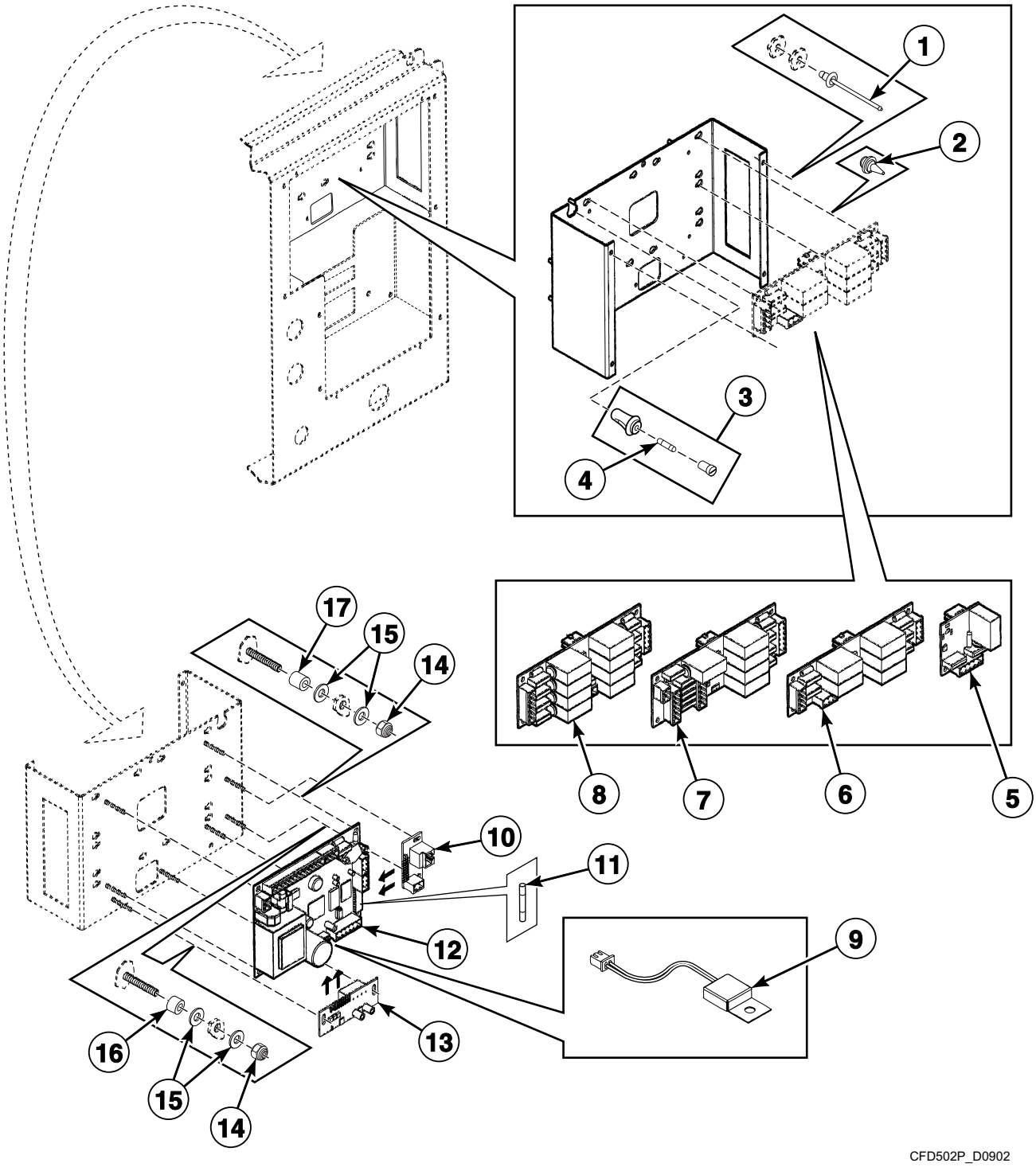

© Copyright, Alliance Laundry Systems LLC – DO NOT COPY or TRANSMIT

Relay, Network Connection and Main Printboards - Cygnus Models

REF	PART NO.	DESCRIPTION	COMMENTS
1	208/00017/00	Rivet	
2	211/00146/00	Standoff	
3	209/00202/00	Fuse Holder	
	209/00202/01	Fuse Holder	Includes item 4
4	209/00468/00	Fuse	3 Amp
5	209/02016/00	Relay PC-Board	
6	209/02005/00	Detergent PC-Board	
7	209/02014/00	Relay PC-Board	
8	209/02008/00	Detergent PC-Board	
9	209/02020/00	ID Chip	
10	209/02006/00	Inverter PC-Board	
11	209/00372/01	Fuse	125 mA; Used with 209/02000/25 Microprocessor
	B12360001	Fuse	1.25 mA; Used with 209/02025/00 Microprocessor
12	209/02025/00	Microprocessor	
13	209/02007/00	Network Connection Printboard	
14	204/00116/00	Nut	
15	223/00123/00	Washer	
16	211/00128/00	Printboard Separator	
17	211/00122/00	Standoff	

© Copyright, Alliance Laundry Systems LLC – DO NOT COPY or TRANSMIT

Electrical Component Mounting Plate - Models Through 2/22/09

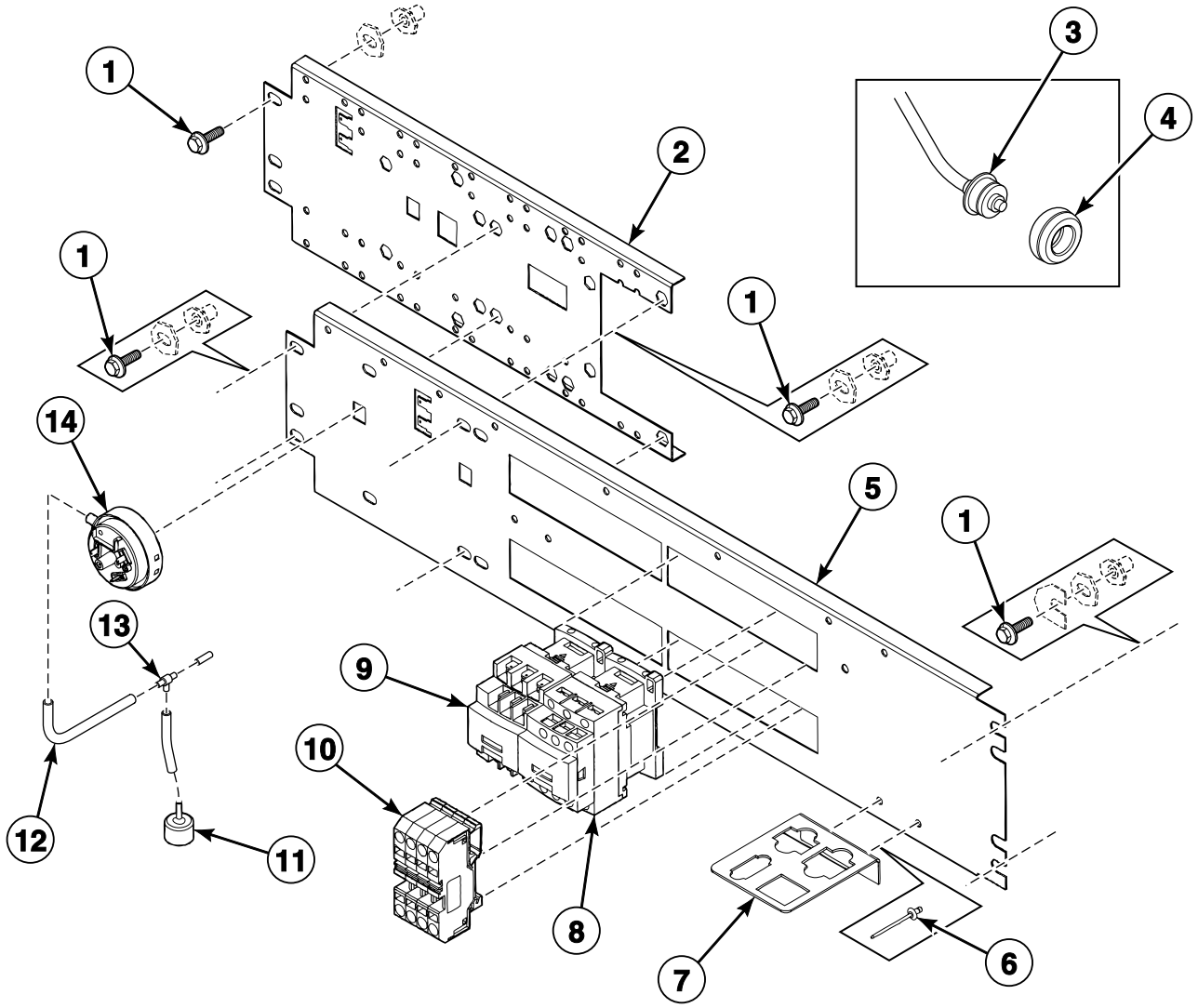

BE000802P_D0902

© Copyright, Alliance Laundry Systems LLC – DO NOT COPY or TRANSMIT

Electrical Component Mounting Plate - Models Through 2/22/09

REF	PART NO.	DESCRIPTION	COMMENTS
1	206/00099/00	Bolt	
2	111/10003/40	Electrical Component Mounting Plate	
3	210/00214/00	Thermostat	Cygnus control models
	210/01064/16	Thermostat	All other models
4	225/10004/00	Thermostat Seal	
5	111/10003/30	Electrical Component Mounting Plate	
6	208/00017/00	Rivet	
7	111/10003/10	Support Connector	
8	209/06148/02	Heating Contactor	LC1D18P7
9	209/00641/04	Heating Contactor	LC1D0901M7
10	209/00619/00	Overload Contactor	2 pole; 6 mm; Gray
	209/00620/00	Overload Contactor	2 pole; 6 mm; Blue
	209/00621/00	Overload Contactor	3 pole; 6 mm; Blue
	209/00622/00	Overload Contactor	3 pole; 6 mm; Gray
	209/00623/00	Overload Contactor	2 pole; 10 mm; Gray
	209/00624/00	Overload Contactor	2 pole; 10 mm; Blue
	209/00625/00	Overload Contactor	3 pole; 10 mm; Gray
	209/00619/01	Connection Clamp	2 pole; 6 mm
	209/00622/01	Connection Clamp	3 pole; 6 mm
	209/00625/01	Connection Clamp	3 pole; 10 mm
11	223/00035/02	Pressure Switch Cap	
12	223/00333/00	Pressure Hose	
13	223/00173/10	Pressure Switch Hose Tee	
14	209/00027/10	Pressure Switch	

© Copyright, Alliance Laundry Systems LLC – DO NOT COPY or TRANSMIT

Electrical Component Mounting Plate - Models Starting 2/23/09

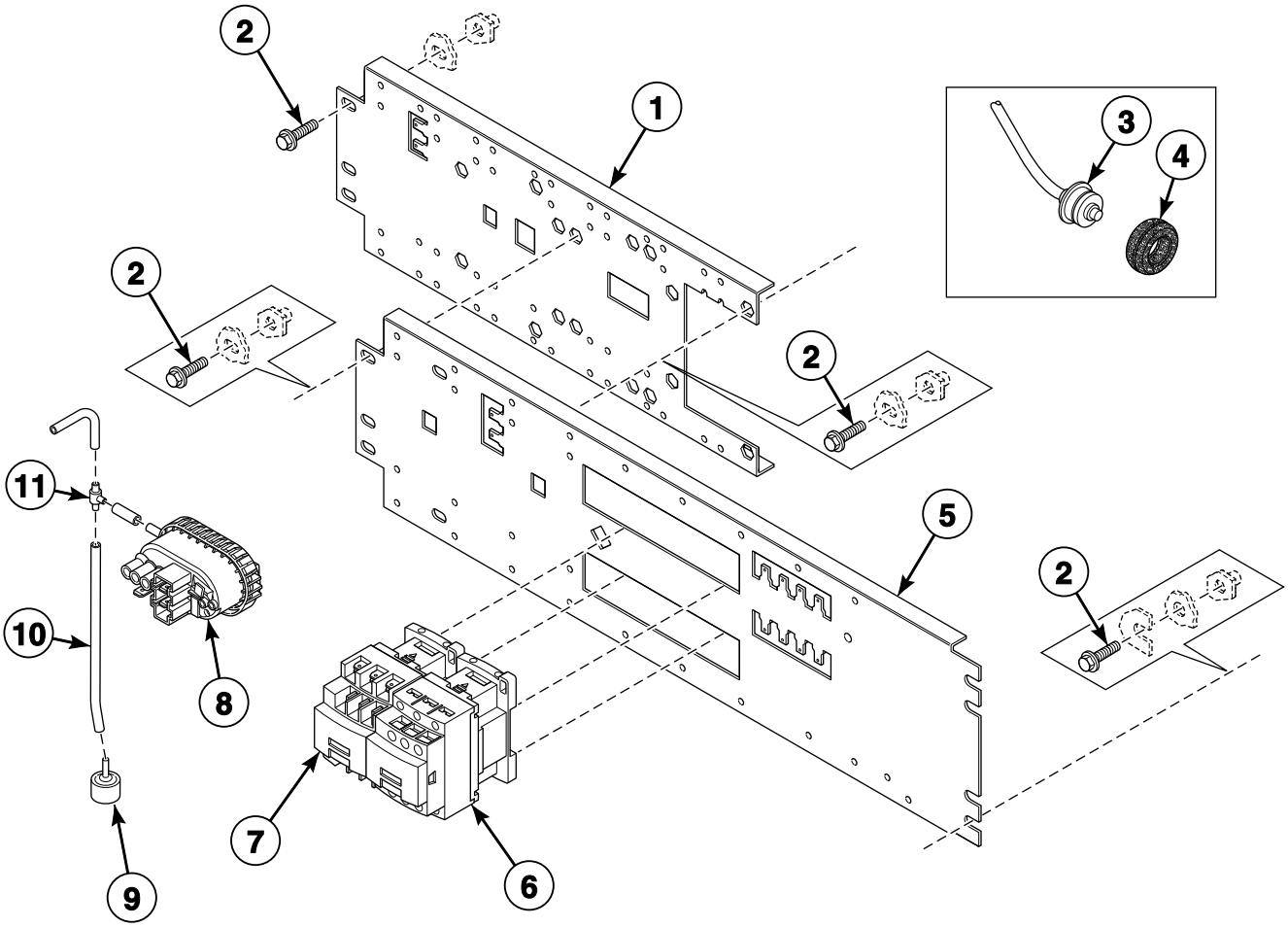

© Copyright, Alliance Laundry Systems LLC – DO NOT COPY or TRANSMIT

Electrical Component Mounting Plate - Models Starting 2/23/09

REF	PART NO.	DESCRIPTION	COMMENTS
1	111/10003/40	Electrical Component Mounting Plate	
2	206/00099/00	Bolt	
3	210/00214/00	Thermostat	Cygnus control models
	210/01064/16	Thermostat	All other models
4	225/10004/00	Thermostat Seal	
5	111/10003/50	Electrical Component Bridge	
6	209/06148/02	Heating Contactor	LC1D18P7
7	209/00641/04	Heating Contactor	LC1D0901M7
8	209/00027/10	Pressure Switch	
9	223/00035/02	Pressure Switch Cap	
10	223/00333/00	Pressure Hose	
11	223/00173/10	Pressure Switch Hose Tee	

© Copyright, Alliance Laundry Systems LLC – DO NOT COPY or TRANSMIT

Balance Switch

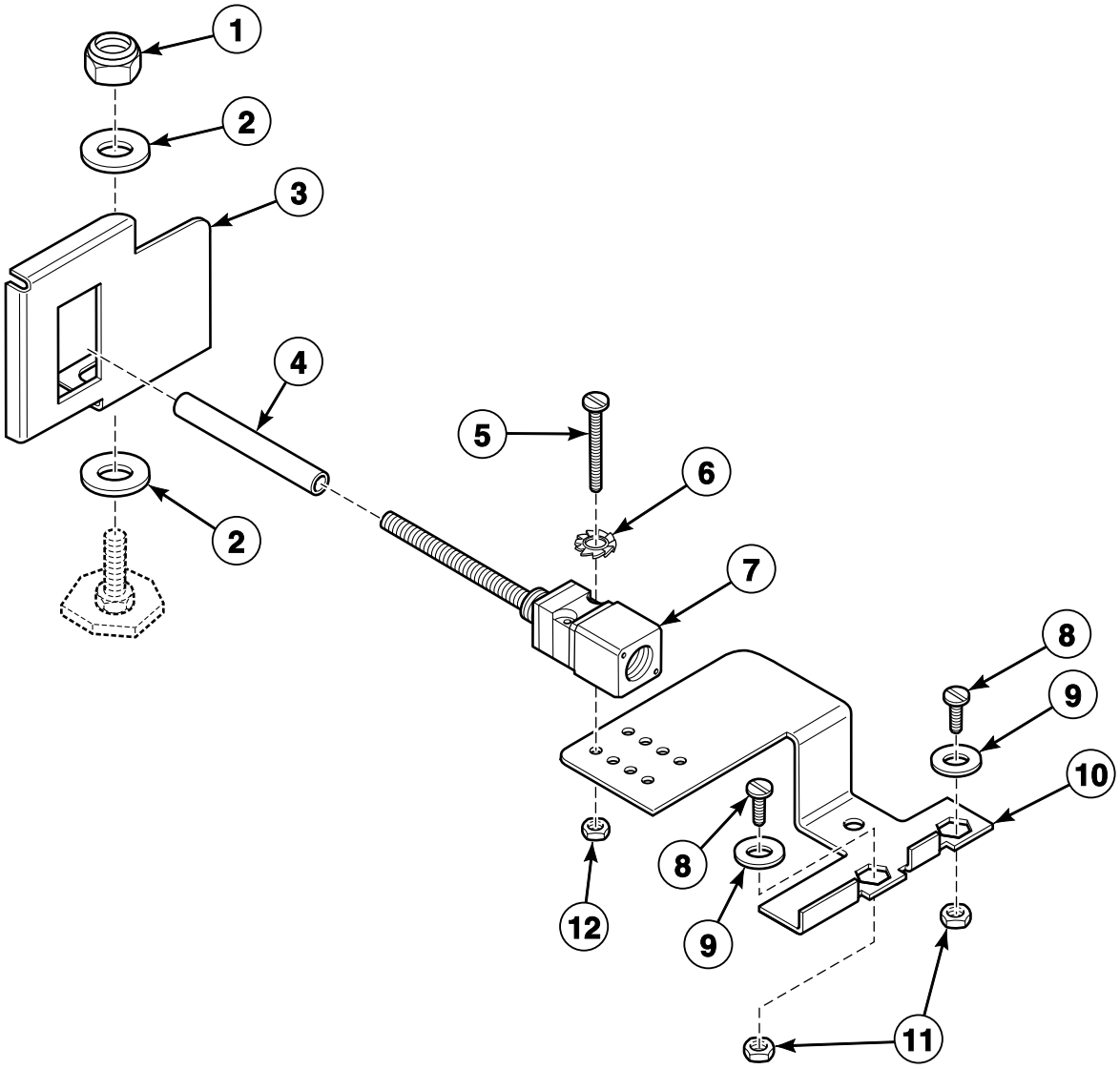

CFD544P_D0902

© Copyright, Alliance Laundry Systems LLC – DO NOT COPY or TRANSMIT

Balance Switch

REF	PART NO.	DESCRIPTION	COMMENTS
1	204/00110/00	Nut	
2	201/00010/00	Washer	
3	111/01854/00	Tilt Detector Plate	
4	223/00246/00	Out-of-Balance Switch Boot	
5	207/00018/00	Screw	
6	203/00006/00	Washer	
7	209/00255/00	Out-of-Balance Switch	
8	B12484601	Bolt	
9	201/00006/00	Washer	
10	111/01855/00	Tilt Switch Support	
11	204/00005/00	Nut	
12	204/00007/00	Nut	

© Copyright, Alliance Laundry Systems LLC – DO NOT COPY or TRANSMIT

Supply Dispenser - Models with Frontal Supply Dispenser

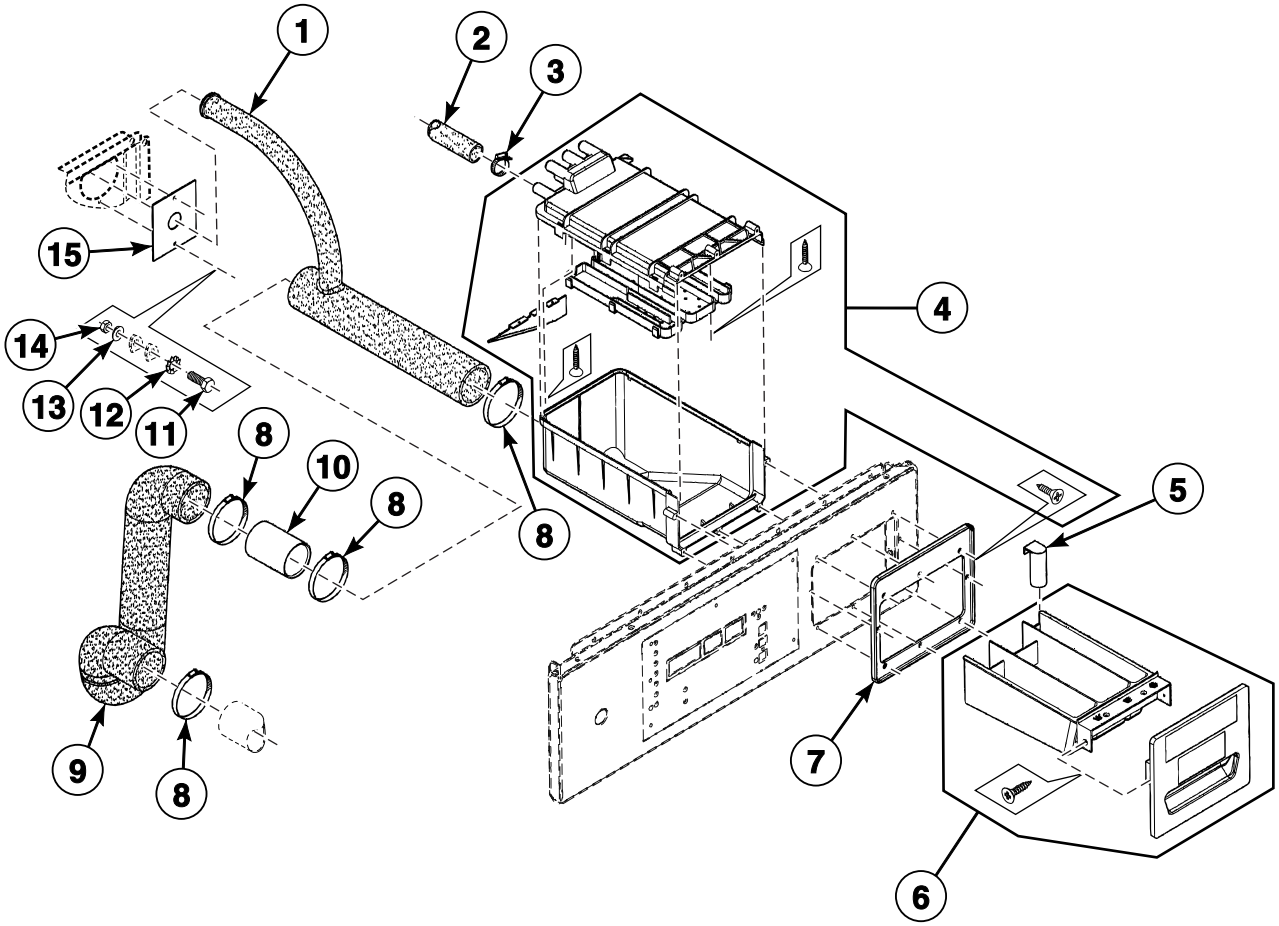

BE000663AP_D0902

© Copyright, Alliance Laundry Systems LLC – DO NOT COPY or TRANSMIT

Supply Dispenser - Models with Frontal Supply Dispenser

REF	PART NO.	DESCRIPTION	COMMENTS
1	223/00286/00	Hose	
2	223/00044/01	Water Hose	
3	F200205	Hose Clamp	
4	223/00280/00	Outer Soapbox	
5	223/00280/03	Front Soapbox Siphon	
6	223/00280/20	Inner Soapbox	
7	223/00280/07	Soapbox Handle	
8	223/00013/00	Hose Clamp	
9	223/00298/00	Hose	
10	118/00118/03	Tube	
11	206/00027/00	Bolt	
12	203/00006/00	Washer	
13	202/00004/00	Washer	
14	204/00007/00	Nut	
15	155/00161/00	Pump Support	

© Copyright, Alliance Laundry Systems LLC – DO NOT COPY or TRANSMIT

Supply Dispenser with Round Ventilation Opening

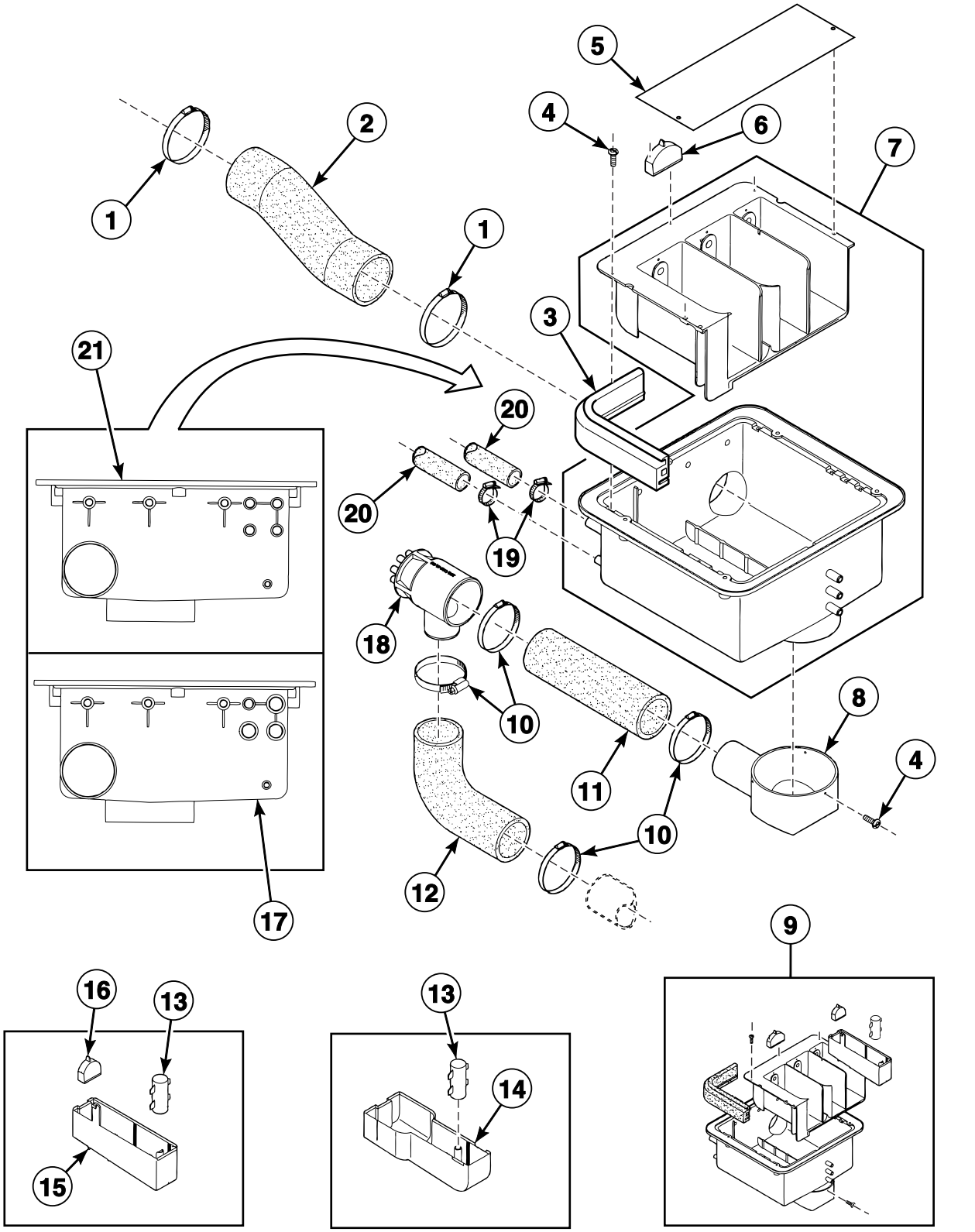

© Copyright, Alliance Laundry Systems LLC – DO NOT COPY or TRANSMIT

Supply Dispenser with Round Ventilation Opening

REF	PART NO.	DESCRIPTION	COMMENTS
1	223/00014/00	Hose Clamp	
2	223/00107/00	Soap Dispenser Air Breather Hose	
	223/00107/01	Ventilating Hose	
	223/00107/03	Vent Hose	
	223/00197/00	Vent Hose	
3	223/00109/00	Soap Dispenser Gasket	
4	B12347501	Screw	
5	123/00107/00	Anti-Splash Plate	Sigma control models
	123/00103/06	Soap Box Assembly Plate	All other models
6	223/00102/06	Soap Spray Nozzle	
7	223/00102/30	Soap Dispenser Assembly	
8	223/00195/00	Dispenser Drain Funnel	
9	223/00102/50	Soap Dispenser Assembly	
10	223/00013/00	Hose Clamp	
11	223/00260/00	Siphon Break Dispenser Hose	*12, *18, *60, *65 and *75 models
	223/00261/00	Soap Dispenser Hose	*25 and *100 models
12	223/00265/00	Siphon Break Hose	*12 and *60 models
	B12310307	Siphon Break Hose	*18, *25, *65, *75 and *100 models
13	223/00102/04	Soap Dispenser Rinse Siphon	
14	223/00102/08	Liquid Soap Dispenser Insert	
15	223/00102/03	Rinse Insert	
16	223/00102/05	Softener Spray Nozzle	
17	223/00102/40	Exterior Box	PB4
18	223/00250/00	Liquid Soap Manifold	
19	F200205	Hose Clamp	
20	223/00044/01	Water Hose	
21	223/00102/30	Soap Dispenser Assembly	PB3

© Copyright, Alliance Laundry Systems LLC – DO NOT COPY or TRANSMIT

Supply Dispenser with Rectangular Ventilation Opening

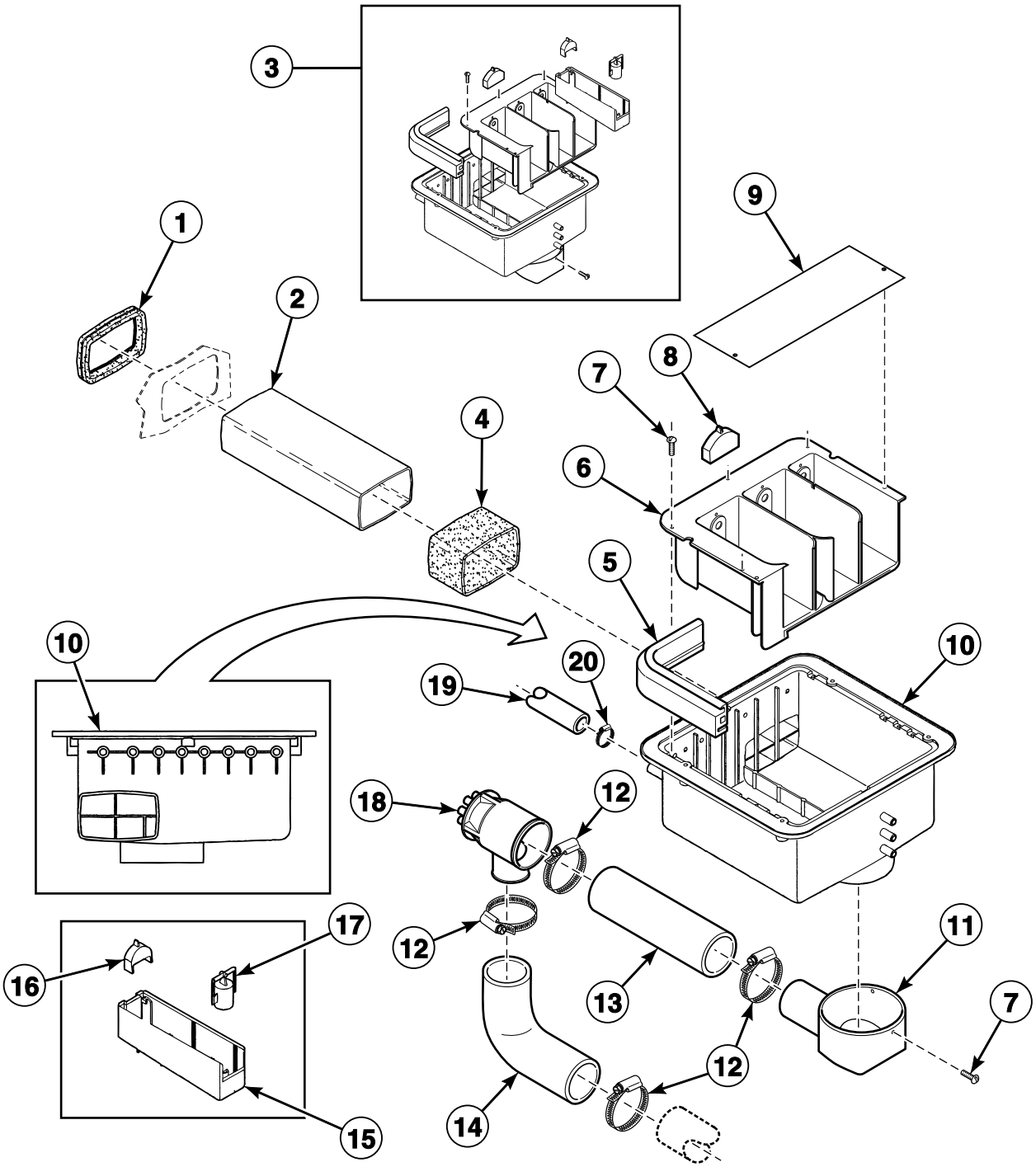

CFD331P_D0902

© Copyright, Alliance Laundry Systems LLC – DO NOT COPY or TRANSMIT

Supply Dispenser with Rectangular Ventilation Opening

REF	PART NO.	DESCRIPTION	COMMENTS
1	223/00226/00	Vent Tube	
2	223/00229/00	Vent Tube	
3	223/00222/00	Soap Dispenser	
4	223/00245/00	Shrink Fit	
5	223/00109/00	Soap Dispenser Gasket	
6	223/00222/60	Outer and Inner Box Kit	
7	B12347501	Screw	
8	223/00102/06	Soap Spray Nozzle	
9	123/00107/00	Anti-Splash Plate	Sigma control models
	123/00103/06	Soap Box Assembly Plate	All other models
10	223/00222/60	Outer and Inner Box Kit	
11	223/00195/00	Dispenser Drain Funnel	
12	223/00013/00	Hose Clamp	
13	223/00260/00	Siphon Break Dispenser Hose	*12, *18, *60, *65 and *75 models
	223/00261/00	Soap Dispenser Hose	*25 and *100 models
14	223/00265/00	Siphon Break Hose	*12 and *60 models
	B12310307	Siphon Break Hose	*18, *25, *65, *75 and *100 models
15	223/00222/05	Rinsing Box	
16	223/00222/03	Softener Spray Nozzle	
17	223/00222/04	Siphon Break	
18	223/00250/00	Liquid Soap Manifold	
19	223/00044/00	Water Hose	
20	F200205	Hose Clamp	

© Copyright, Alliance Laundry Systems LLC – DO NOT COPY or TRANSMIT

Electric and Steam Heating Options

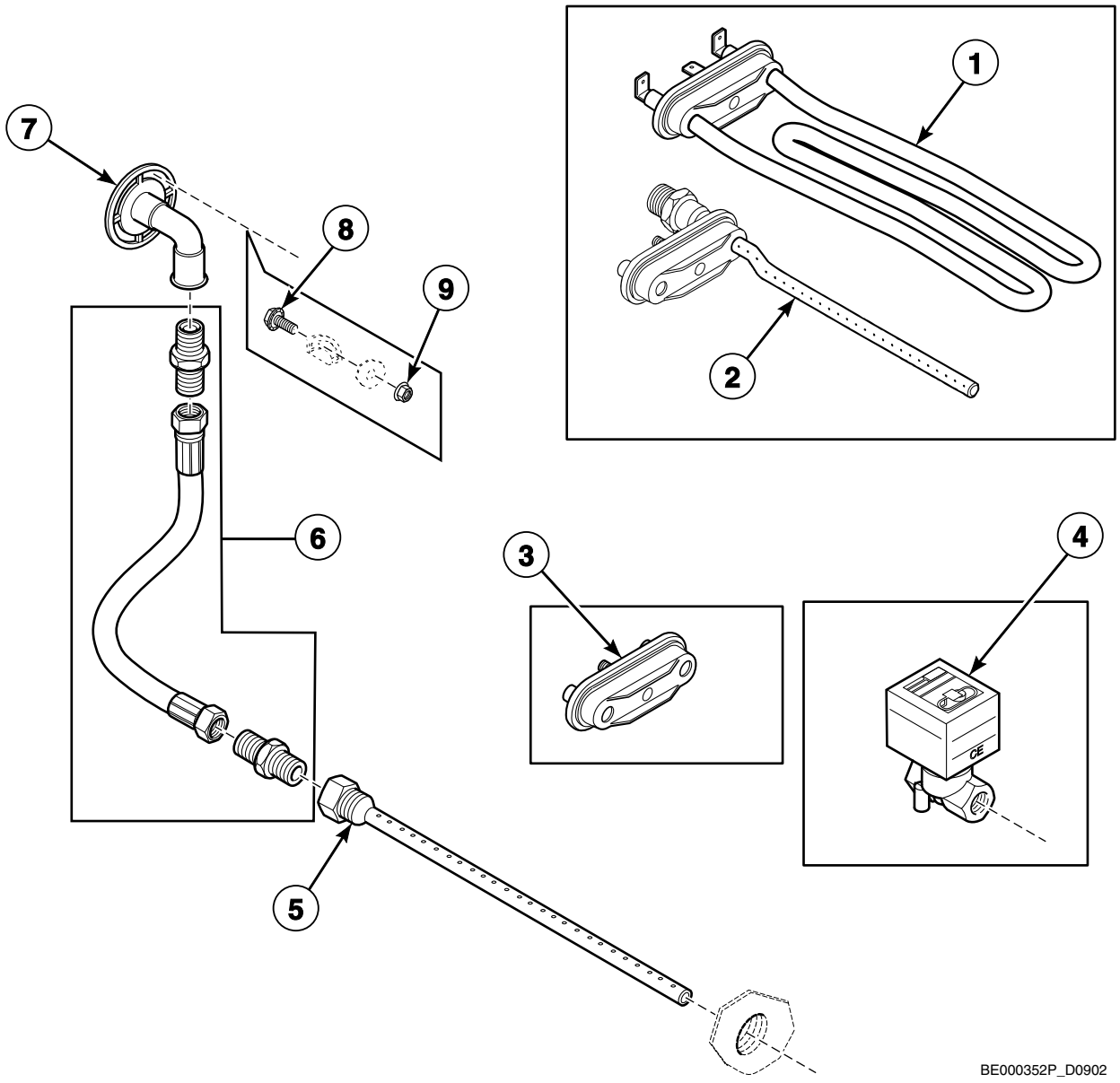

© Copyright, Alliance Laundry Systems LLC – DO NOT COPY or TRANSMIT

Electric and Steam Heating Options

REF	PART NO.	DESCRIPTION	COMMENTS
1	209/00581/10	Heating Element	4000W
	209/00562/20	Heating Element	3000W
	209/00563/20	Heating Element	2000W
	209/00564/20	Heating Element	1400W
2	118/00105/01	Steam Injector	
3	209/00196/00	Heating Element Plug	
4	209/00477/00	Steam Valve	
5	119/00082/00	Steam Injector	
6	217/00025/00	Steam Hose	
7	118/01063/00	Steam Inlet	
8	206/00099/00	Bolt	
9	206/00101/00	Nut	

© Copyright, Alliance Laundry Systems LLC – DO NOT COPY or TRANSMIT

Soap Pumps

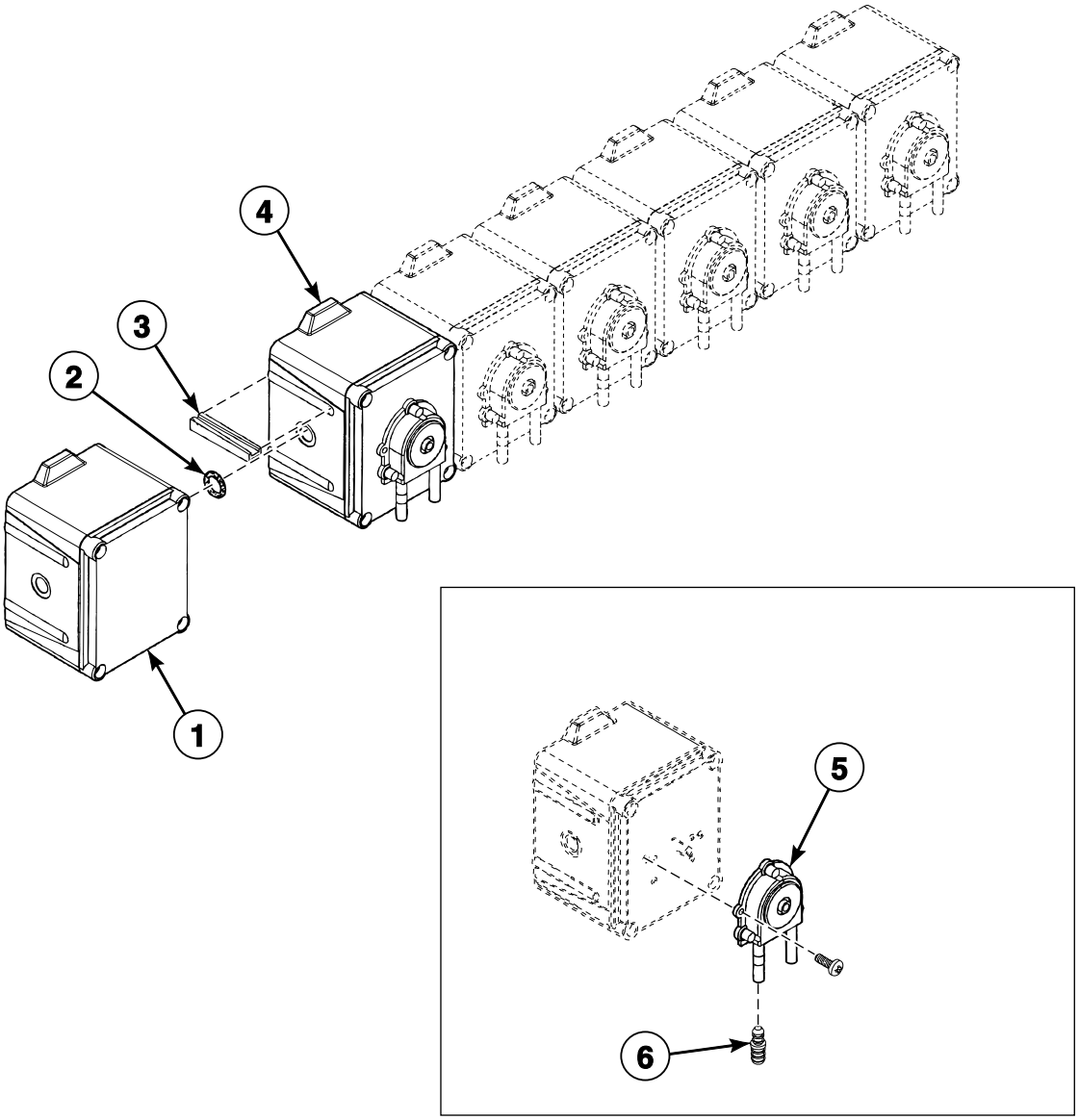

BE000527AP_D0902

© Copyright, Alliance Laundry Systems LLC – DO NOT COPY or TRANSMIT

Soap Pumps

REF	PART NO.	DESCRIPTION	COMMENTS
1	209/00554/01	Soap Pump Assembly	1 pump and 1 feeding pump
	209/00554/02	Soap Pump Assembly	2 pumps and 1 feeding pump
	209/00554/03	Soap Pump Assembly	3 pumps and 1 feeding pump
	209/00554/04	Soap Pump Assembly	4 pumps and 1 feeding pump
	209/00554/05	Soap Pump Assembly	5 pumps and 1 feeding pump
	209/00554/06	Soap Pump Assembly	6 pumps and 1 feeding pump
	209/00554/51	Feeding Liquid Soap Dosing Pump	
2	209/00554/52	Liquid Soap Dosing Pump O-Ring	
3	209/00554/53	Liquid Soap Dosing Pump Connection Piece	
4	209/00554/50	Pump	
5	209/00554/98	Hose	
6	209/00554/99	Hose Connector	

© Copyright, Alliance Laundry Systems LLC – DO NOT COPY or TRANSMIT

Notes

© Copyright, Alliance Laundry Systems LLC – DO NOT COPY or TRANSMIT

Parts Index

A

Anti-Splash Plate
123/00107/00 ..... 113, 115

B

Backbridge
111/01832/00 ..... 81, 87, 95
111/10426/90 ..... 83, 91, 93

Backplate
111/01002/00 ..... 73, 75

Ball Bearing
215/00001/03 ..... 21, 23
216/00001/02 ..... 21, 23

Basket and Shaft Assembly
B12379501 ..... 19, 27
B12379601 ..... 19, 27
B12379701 ..... 19, 27
B12379801 ..... 19, 27
B12379901 ..... 19, 27
B12380001 ..... 19, 27

Basket Kit
B12542501 ..... 19, 27
B12542601 ..... 19, 27
B12542701 ..... 19, 27
B12542801 ..... 19, 27

Bearing Housing Assembly
152/00117/00 ..... 21, 23
152/10117/01 ..... 21, 23

Bearing Kit
3881P 23

Bearing Replacement Kit
387P4 21

Bearing Replacement Tool Kit
380P3 ..... 21, 23

Bearing Spacer
217/00100/00 25

Belt
255/00013/00 ..... 25, 27, 29

Bolt
B12484601 109
205/00102/00 ..... 21, 23
205/00103/00 41
205/00104/00 ..... 21, 23
205/00106/00 81
205/00107/00 43
205/00115/00 41
206/00005/00 ..... 25, 27
206/00011/00 ..... 13, 15, 17
206/00014/00 ..... 91, 93
206/00027/00 ..... 91, 93, 95, 97, 99, 111
206/00032/00 19
206/00033/00 ..... 31, 33, 35, 37, 39
206/00054/00 29
206/00088/00 ..... 83, 87
206/00099/00 ..... 29, 37, 39, 77, 79, 81, 83, 87, 91, 93, 95, 105, 107, 117
206/00114/00 ..... 77, 79
207/00125/00 ..... 43, 77, 79

Boot
255/00123/00 ..... 13, 15, 17, 19

C

Cable Duct
223/00231/00 77

Caddy Bracket
224/00051/00 ..... 21, 23
224/00052/00 ..... 21, 23

Central Control Board
209/00438/50 ..... 99, 101

Circuit Board Cover
229/00262/00 ..... 67, 69, 71
229/00289/00 ..... 45, 47, 49, 51, 53, 55, 57, 59, 61, 63, 65

Clamp
223/00009/00 ..... 37, 39
238/00017/00 ..... 13, 15, 17, 19

Coin Box
254/00077/00 ..... 73, 75

Coin Drop
B11211209 73
B12311201 73
B12311202 73
B12311203 73
B12311204 73
B12311205 73
B12311206 73
B12311207 73
B12311208 73
B12311210 73
B12311211 73
B12311212 73
B12311214 73
B12311215 73
B12311216 73
B12311218 73
B12311219 73
B12311220 73
B12311221 73
B12311222 73
B12311224 73
B12311225 73
B12311226 73
B12311234 73
B12311235 73
B12311239 73
B12311241 73
B12311244 73
B12311247 73
B12311248 73
B12311249 73
B12311252 73
B12311301 73
B12311302 73
B12311304 73
B12311401 75
B12323401 73
B12323901 73

Connecting Piece
255/00017/00 37

N/A items do not appear in index.

© Copyright, Alliance Laundry Systems LLC – DO NOT COPY or TRANSMIT

Connection Clamp
209/00619/01 105
209/00622/01 105
209/00625/01 105

Contact Switch
209/00099/26 .... 45, 47, 49, 55, 57, 63, 65, 67, 69, 71

Control Board
209/00547/00 ..... 67, 69

Cordlock
211/00167/00 29
211/00168/00 ..... 91, 93

Counter Ring
217/00004/00 ..... 25, 27

Crossbar Soap Dispenser
155/00162/00 81

Cylinder
B12379401 ..... 19, 27
111/01915/00 ..... 13, 15, 17, 19, 25, 27

Cylinder and Shaft Assembly
111/01806/00 ..... 13, 25
111/01807/00 ..... 13, 25
111/01917/00 ..... 15, 17, 19, 27

D

Data Card Ribbon Assembly
B12538301 ..... 45, 47, 49, 51, 53, 55, 57, 59, 61

Datacard
209/02022/00 ..... 45, 47, 49, 51, 53, 55, 57, 59, 61

Datacard Cover
223/00348/00 ..... 45, 47

Decal
225/00403/00 69

Detergent PC-Board
209/02005/00 103
209/02008/00 103

Dispenser Drain Funnel
223/00195/00 ..... 113, 115

Display PC-Board
209/02002/00 45

Door Frame
118/00046/10 43

Door Glass
217/00023/00 43

Door Glass Seal
217/00015/00 43

Door Handle
217/00059/00 43
217/00065/00 43

Door Handle Stop
217/00016/00 43

Door Hinge
221/00005/00 43

Door Hinge Assembly
217/00009/02 43

Door Hinge Plate Assembly
118/00065/00 43

Door Hinge Spacer
117/00010/00 43

Door Latch Cord
224/00015/00 41

Door Lock Assembly
217/00052/00A 41
217/00052/01A 41

Door Lock Bracket
217/00052/11 41

Door Lock Microswitch
209/00272/00 41

Door Lock PC-Board
209/02010/00 ..... 45, 47, 49, 51, 53, 55, 57, 59, 61

Door Lock Pin Kit
211/00109/02 43

Door Lock Spacer
217/00052/03 41

Door Lock Spring
224/00049/00 41

Door Solenoid Assembly
B12495102 41

Drain Hose
223/00307/00 39

Drain Piece
155/00155/00 ..... 37, 39
223/00146/00 ..... 31, 33, 37, 39

Drain Pipe
223/00297/00 35

Drain Pipe Cap
223/00294/00 35

Drain Pipe Kit
899P3 ..... 37, 39

Drain Valve
209/00463/00 ..... 33, 35
209/00643/00 31

Drain Valve Coil Cover
209/00643/01 31

Drain Valve Hose
223/00190/00 ..... 31, 33, 35
223/00303/00 ..... 31, 33, 35

Drum and Axle
B12325701 ..... 15, 17, 19, 27
B12326101 ..... 13, 15, 17, 19, 25, 27

Dual Drop Optical Sensor Kit
B12388102 73

E

Electrical Component Bridge
111/10003/50 107

Electrical Component Mounting Plate
111/10003/30 105
111/10003/40 ..... 105, 107

Electrical Connection Plate
111/00094/10 ..... 91, 93
111/00188/06 ..... 91, 93, 99

Electrical Connection Sticker
229/00068/02 ..... 91, 93

Electronic Coin Meter Housing
152/00112/50 75

Emergency Switch Pushbutton
209/00099/20 ..... 45, 47, 49

Eprom
209/00266/01 ..... 63, 65

Exterior Box
223/00102/40 113

N/A items do not appear in index.

© Copyright, Alliance Laundry Systems LLC – DO NOT COPY or TRANSMIT

F

Facia and Outer Coin Box Assembly Kit
245/00124/00 69

Fan
209/00465/00 ..... 29, 83, 87

Fan Filter
209/00465/11 87

Fan Grill
209/00465/01 83

Fan Plate Assembly
152/00044/03 29

Fastening Piece
217/00060/00 ..... 73, 75

Fastening Ring
238/00013/00 ..... 17, 19

Fastening Rubber
247/00006/00 11
247/00007/00 11

Feeding Liquid Soap Dosing Pump
209/00554/51 119

Filter
B12331701 ..... 87, 97, 99
B12352301 ..... 87, 97, 99
209/00465/21 87
227/00177/00 ..... 87, 97, 99

Filter Bracket
111/01837/01 97

Frame
152/00101/50 9
152/00102/50 9
152/00119/50 9

Front Panel
111/00284/00 ..... 77, 79

Front Plate
111/01000/00 ..... 73, 75

Front Soapbox Siphon
223/00280/03 111

Fuse
B12360001 103
B12389501 ..... 97, 99
209/00372/01 ..... 63, 65, 67, 69, 71, 103
209/00468/00 ..... 87, 99, 101, 103
209/00552/11 71

Fuse Holder
209/00202/00 ..... 99, 101, 103
209/00202/01 ..... 99, 101, 103

G

Grommet
223/00174/00 ..... 83, 87
223/00198/00 77
223/00203/00 99

Ground Terminal
209/00006/01 97
210/10015/00 41

H

Hanging Drain Pump
209/00560/00 37

Heating Contactor
209/00641/04 ..... 105, 107
209/06148/02 ..... 105, 107

Heating Element
209/00562/20 117
209/00563/20 117
209/00564/20 117
209/00581/10 117

Heating Element Plug
209/00196/00 117

Hose
209/00554/98 119
223/00286/00 111
223/00298/00 111

Hose Barb
223/00016/00 31

Hose Clamp
F200205 ..... 31, 33, 35, 91, 93, 95, 111, 113, 115
223/00011/00 ..... 31, 37, 39
223/00012/00 ..... 37, 39
223/00013/00 ..... 31, 33, 35, 111, 113, 115
223/00014/00 ..... 31, 33, 35, 37, 39, 113

Hose Connector
209/00554/99 119

Hose Vent
223/00102/07 ..... 91, 95

I

ID Chip
209/02020/00 103

Infrared Cable
210/00902/00 ..... 45, 47, 49, 51, 53, 55, 57, 59, 61, 67, 69, 71

Inlet Valve, 2-Way
B12519501 ..... 91, 93, 95
209/00110/00 ..... 91, 93, 95

Inner Soapbox
223/00280/20 111

Input Block
209/00683/00 75

Insulating Sticker
229/00255/00 ..... 63, 65, 67, 69, 71
229/00268/00 45
229/00291/00 ..... 47, 49, 51, 53

Interlock Coil Spring
224/00043/00 41

Interlock Lever
217/00052/04 41

Inverter
227/00166/00 85
227/00227/00 ..... 85, 89

Inverter Box Cover
111/10425/01 ..... 83, 87
111/10425/11 ..... 83, 87

Inverter Drive
F8420901 ..... 85, 89
F8420902 ..... 85, 89
F8420903 ..... 85, 89

N/A items do not appear in index.

© Copyright, Alliance Laundry Systems LLC – DO NOT COPY or TRANSMIT

F8420904 ..... 85, 89
F8420905 ..... 85, 89
F8420906 ..... 85, 89
F8420907 ..... 85, 89
F8420908 ..... 85, 89
227/00124/00 85
227/00167/00 ..... 85, 89
227/00228/00 ..... 85, 89
227/00236/00 ..... 85, 89

Inverter Drive Box
111/10425/00 ..... 83, 87
111/10425/50 ..... 83, 87

Inverter Drive Kit
F8420801 ..... 85, 89
F8420802 ..... 85, 89
F8420803 ..... 85, 89
F8420804 ..... 85, 89
F8420805 ..... 85, 89
F8420806 ..... 85, 89
F8420807 ..... 85, 89
F8420808 ..... 85, 89

Inverter PC-Board
209/02006/00 103

K

Key
254/00077/02 ..... 73, 75

Keypad
209/00552/01 71

Keypad Sticker
225/00407/00 63

L

Label
225/00397/00 71

Leveling Leg
252/00006/00 9

Lever Spring
224/00040/00 41

Light Microswitch
209/00273/00 41

Lip Seal
B12332201 23

Liquid Soap Dispenser Insert
223/00102/08 113

Liquid Soap Dosing Pump Connection Piece
209/00554/53 119

Liquid Soap Dosing Pump O-Ring
209/00554/52 119

Liquid Soap Manifold
223/00250/00 ..... 83, 87, 93, 113, 115

Lock Protection Plate
117/00052/08 41

Lock Shaft
217/00017/03 41

Lower Front Panel
111/00285/00 81

Lower Rear Panel
111/10427/01 ..... 77, 79

M

Main Board
B12351701 71

Main Switch
209/00526/00 97
209/00529/00 97
209/00672/00 97

Main Switch Cover
111/01834/00 97

Mechanical Coin Meter Housing
152/00112/00 73

Memory Card PC Board
B12305201 51

Memory Card PC-Board
B12305201 ..... 45, 47, 49, 53, 55, 57, 59, 61

Microprocessor
209/02025/00 103

Motor
B12510501 29
209/00643/11 31
255/00014/00 29

Motor Key
227/00126/01 29

Motor Pulley
255/00012/00 29

Mounting Plate
223/00374/00 ..... 45, 47, 49, 51, 53, 55, 57, 59, 61

Mushroom Pushbutton
209/00248/20 ..... 55, 57, 63, 65, 67, 69, 71

N

Network Connection Printboard
209/00540/01 ..... 99, 101
209/02007/00 103

Noise Filter
B12339301 ..... 87, 97, 99
B12339401 ..... 87, 97, 99
227/00162/00 ..... 87, 97, 99
227/00163/00 ..... 87, 97, 99
227/00242/00 ..... 87, 97, 99

Nut
204/00005/00 109
204/00006/00 81
204/00007/00 ..... 83, 87, 95, 99, 109, 111
204/00008/00 ..... 41, 73, 75
204/00009/00 ..... 13, 15, 17, 19, 41, 77, 79, 81
204/00103/00 43
204/00106/00 43
204/00109/00 29
204/00110/00 ..... 11, 13, 15, 17, 19, 109
204/00111/00 ..... 9, 21, 23
204/00114/00 ..... 67, 83, 87
204/00115/00 29
204/00116/00 ..... 45, 47, 49, 51, 53, 55, 57, 59, 61, 63, 65, 69, 71, 73, 75, 103
204/00201/00 ..... 31, 33, 35, 91, 93, 95
206/00101/00 ..... 31, 33, 35, 39, 117
206/00105/00 ..... 37, 39
206/00106/00 9
208/00002/00 ..... 75, 91, 93, 95
208/00025/00 81
208/00104/00 ..... 77, 79

N/A items do not appear in index.

© Copyright, Alliance Laundry Systems LLC – DO NOT COPY or TRANSMIT

209/00101/00 37
211/00171/00 87
211/00182/00 87

O

Operating Label
225/00406/00 69

Operating Panel
111/01817/00 55
111/01818/00 59
111/01826/00 61
111/01827/00 57
111/01900/00 47
111/01901/00 51
111/01904/00 49
111/01905/00 53

Operating Sticker
225/00400/00 71
225/00404/00 67
225/00405/00 67
225/00408/00 63
225/00409/00 65
225/10305/00 ..... 59, 61
225/10306/00 ..... 59, 61
225/10307/00 ..... 55, 57
225/10308/00 ..... 55, 57
225/10313/00 45
225/10403/00 ..... 51, 53
225/10404/00 ..... 47, 49
225/10426/00 45
225/10427/00 ..... 47, 49

Optical Switch
209/00781/00 73

O-Ring
217/00002/00 21

Outer and Inner Box Kit
223/00222/60 115

Outer Soapbox
223/00280/00 111

Outer Tub
B12327701 ..... 13, 15, 17, 19
B12327801 ..... 13, 15, 17, 19
B12328001 ..... 13, 15, 17, 19
B12328101 ..... 13, 15, 17, 19
B12328301 ..... 13, 15, 17, 19
B12328401 ..... 13, 15, 17, 19
B12328601 19
B12328701 ..... 13, 15, 17, 19
117/00202/00 ..... 13, 15, 17

Outlet Pipe Plate Assembly
101/00007/00 ..... 31, 33, 35, 37, 39, 81

Out-of-Balance Switch
209/00255/00 109

Out-of-Balance Switch Boot
223/00246/00 109

Overflow Hose
223/00100/00 31
223/00150/00 ..... 31, 33, 35

Overload Contactor
209/00619/00 105
209/00620/00 105
209/00621/00 105
209/00622/00 105
209/00623/00 105
209/00624/00 105
209/00625/00 105

P

Parameter Unit Assembly
F8410901 ..... 83, 87
227/00171/00 ..... 83, 87

Parameter Unit Program Cable
227/00171/10 ..... 83, 87

Pipe
223/00159/00 ..... 37, 39

Plexi Frame
225/00316/00 ..... 63, 65, 67, 69
225/00321/00 45
225/00322/00 ..... 55, 57, 59, 61
225/00323/00 ..... 47, 49, 51, 53

Plug
211/00091/00 ..... 91, 93

Pressure Hose
223/00179/10 ..... 83, 87
223/00333/00 ..... 31, 33, 35, 37, 39, 105, 107

Pressure Switch
209/00027/10 ..... 105, 107

Pressure Switch Cap
223/00035/02 ..... 33, 35, 37, 39, 105, 107

Pressure Switch Elbow
223/00210/00 31

Pressure Switch Hose Tee
223/00173/10 ..... 31, 33, 35, 37, 39, 105, 107

Prewash and Mainwash Nozzle
223/00001/04 ..... 31, 33, 35, 91, 93, 95

Printboard
209/00440/70 ..... 63, 65, 69
209/00440/80 ..... 63, 65, 69
209/02001/02 ..... 55, 57, 59, 61
209/02015/02 ..... 47, 49, 51, 53

Printboard Separator
211/00128/00 ..... 45, 47, 49, 51, 53, 55, 57, 59, 61, 103

Printboard Support
111/01838/10 101

Printboard Support Card
111/01893/00 ..... 45, 47

Programming Key Contact Switch
209/00326/20 71

Protection LED
223/00330/00 ..... 55, 57, 59, 61

Pulley
255/00117/00 ..... 25, 27

Pump
209/00554/50 119
209/00646/00 39
209/00647/00 39

Pump Protection Plate
111/00289/00 77

Pump Support
111/00288/10 39
155/00159/00 37
155/00161/00 111

Pushbutton
209/00396/00 ..... 73, 75

N/A items do not appear in index.

© Copyright, Alliance Laundry Systems LLC – DO NOT COPY or TRANSMIT

R

Reinforcement Plate
111/10089/01 ..... 77, 79

Reinforcing Triangle
155/00144/00 79

Relay PC-Board
209/02014/00 103
209/02016/00 103

Retaining Ring
117/00042/00 ..... 29, 81
212/00038/00 ..... 21, 23

Rinse Insert
223/00102/03 113

Rinsing Box
223/00222/05 115

Rivet
208/00017/00 ..... 91, 93, 97, 101, 103, 105
211/00093/00 91

S

Screw
B12347501 ..... 113, 115
B12350903 93
B12500801 43
206/00053/00 ..... 9, 21, 23
206/00058/00 29
206/00166/00 81
207/00009/00 41
207/00018/00 109
207/00021/00 87
207/00031/00 99
207/00101/00 81
207/00117/00 29
207/00121/00 83
207/00126/00 43
207/00135/00 41
208/00014/00 ..... 75, 81, 91, 93, 95
208/00130/00 ..... 83, 87

Seal Cover
117/00001/00 21

Seal Plate Assembly
B12333601 23

Shaft Seal
217/00003/00 21

Shaft Seal Holder
117/00001/01 21

Shock Absorber
247/00002/00 11
247/00002/02 11
247/00002/03 11
247/00003/00 11

Shrink Fit
223/00245/00 115

Side Panel
111/10089/00 ..... 77, 79, 81
111/10097/00 ..... 77, 79, 81
111/10128/00 ..... 77, 79, 81
111/60031/00 ..... 77, 79, 81
111/60034/00 ..... 77, 79, 81
111/60048/00 ..... 77, 79, 81

Side Panel Gasket
246/00079/00 ..... 77, 79, 81

Single Drop Optical Sensor Kit
B12388101 73

Siphon Break
223/00222/04 115

Siphon Break Dispenser Hose
223/00260/00 ..... 113, 115

Siphon Break Hose
B12310307 ..... 113, 115
223/00265/00 ..... 113, 115

Soap Box Assembly Plate
123/00103/06 ..... 113, 115

Soap Dispenser
223/00222/00 115

Soap Dispenser Air Breather Hose
223/00107/00 113

Soap Dispenser Assembly
223/00102/30 113
223/00102/50 113

Soap Dispenser Cover
223/00103/01 ..... 77, 79

Soap Dispenser Cover Hinge Rod
223/00103/04 ..... 77, 79

Soap Dispenser Frame
223/00103/03 ..... 77, 79

Soap Dispenser Gasket
223/00109/00 ..... 113, 115

Soap Dispenser Hose
223/00261/00 ..... 113, 115

Soap Dispenser Rinse Siphon
223/00102/04 113

Soap Injection PCB with Fuse
209/00218/13 ..... 99, 101

Soap Pump Assembly
209/00554/01 119
209/00554/02 119
209/00554/03 119
209/00554/04 119
209/00554/05 119
209/00554/06 119

Soap Spray Nozzle
223/00102/06 ..... 113, 115

Soapbox Handle
223/00280/07 111

Softener Spray Nozzle
223/00102/05 113
223/00222/03 115

Speed Detector
209/00400/00 ..... 21, 23

Speed Detector Bracket
152/00055/00 ..... 21, 23

Spring
238/00014/00 ..... 17, 19

Spring Holder Top
247/00001/04 11

Spring Seat Bottom
247/00001/03 11

Standoff
211/00120/00 99
211/00122/00 ..... 45, 47, 49, 51, 53, 63, 65, 67, 69, 71, 103
211/00145/00 ..... 45, 47
211/00146/00 ..... 101, 103

N/A items do not appear in index.

© Copyright, Alliance Laundry Systems LLC – DO NOT COPY or TRANSMIT

Steam Hose
217/00025/00 117
Steam Injector
118/00105/01 117
119/00082/00 117
Steam Inlet
118/01063/00 117
Steam Valve
209/00477/00 117
Stopper
223/00162/00 ..... 37, 39
255/00019/00 ..... 37, 39
Support Connector
111/10003/10 105
Suspension Spring
247/00001/01 11
247/00002/01 11
247/00009/00 11
Switch
209/00600/01P 73
Switch Base
209/00099/25 71
Switch Knob
209/00099/29 71
Switch Lever
217/00052/05 41

T

Telem Sticker
209/00520/00 .... 45, 47, 49, 55, 57, 63, 65, 67, 69, 71
Terminal Block
209/00058/00 99
209/00527/00 97
209/00530/00 97
Thermostat
210/00214/00 ..... 105, 107
210/01064/16 ..... 105, 107
Thermostat Seal
225/10004/00 ..... 105, 107
Tilt Detector Plate
111/01854/00 ..... 13, 15, 17, 19, 109
Tilt Switch Support
111/01855/00 109
Tolerance Ring
215/00004/00 ..... 25, 27
Top Panel
111/01001/00 ..... 73, 75
111/22141/00 ..... 77, 79
111/22142/00 ..... 77, 79
155/00142/00 ..... 77, 79
Transformer
209/00682/00 75
Trap
223/00316/00 31
Tub Front Gasket
B12351601 ..... 13, 15, 17, 19
Tub Front Panel
118/00054/03 ..... 13, 15, 17, 19
Tub Front Panel Clip
217/00008/00 ..... 13, 15, 17, 19
Tub Front Ring Clamp
217/00007/00 ..... 13, 15, 17, 19
Tub Support
152/00104/00 9
152/00105/00 9
152/00106/00 9
152/00122/00 9
Tub to Drain Valve Hose
255/00010/00 ..... 33, 35, 39
255/00010/01 37
Tube
118/00118/03 111

U

Upper Backpanel
111/01832/10 95
Upper Front Panel
111/01813/00 65
111/01814/00 ..... 63, 67
111/01845/00 45
111/01848/00 71
111/01963/00 71

V

Vent Hose
223/00107/03 113
223/00197/00 113
Vent Tube
223/00226/00 ..... 93, 95, 115
223/00229/00 115
Ventilating Hose
223/00107/01 113
Voltage Discharge Decal
B12355001 87

W

Washer
B12421401 81
201/00002/00 ..... 31, 33, 35, 91, 93, 95
201/00005/00 9
201/00006/00 ..... 29, 41, 81, 91, 93, 95, 109
201/00007/00 ..... 19, 31, 33, 35, 37, 39
201/00010/00 ..... 13, 15, 17, 19, 109
201/00012/00 ..... 21, 23
201/00015/00 ..... 11, 25, 27
201/00017/00 41
201/00018/00 41
201/00201/00 ..... 21, 23
202/00003/00 ..... 13, 15, 17, 81
202/00004/00 ..... 83, 91, 93, 95, 97, 111
202/00101/00 ..... 41, 43
202/00104/00 43
202/00108/00 43
202/00111/00 43
202/00124/00 41
203/00002/00 ..... 25, 27
203/00004/00 ..... 21, 23
203/00005/00 81
203/00006/00 ..... 63, 65, 83, 87, 95, 97, 99, 109, 111
203/00007/00 41
203/00015/00 81
208/00009/00 81

N/A items do not appear in index.

© Copyright, Alliance Laundry Systems LLC – DO NOT COPY or TRANSMIT

223/00051/10 71
223/00123/00 ..... 45, 47, 49, 51, 53, 55, 57, 59, 61, 71, 103

Water Hose
F200164 ..... 91, 95
F200166 ..... 91, 95
223/00044/00 ..... 31, 91, 93, 95, 115
223/00044/01 ..... 33, 35, 91, 93, 95, 111, 113

Wire Assembly
B12359901 73

N/A items do not appear in index.

© Copyright, Alliance Laundry Systems LLC – DO NOT COPY or TRANSMIT